Product datasheet

Specifications

Green Premium™

regulated SMPS - 1 or 2-phase - 100..240 V AC - 24 V - 1.2 A

Local distributor code:

389706643 ABL8MEM24012

Discontinued on: 11 Nov 2020

End-of-service on: 2 Jul 2021

Discontinued

EAN Code: 3389119405560

Main

Range Of Product	Modicon Power Supply
Product Or Component Type	Power supply
Power Supply Type	Regulated switch mode
Nominal Input Voltage	100...240 V AC phase to phase, terminal(s): L1-L2 100...240 V AC single phase, terminal(s): N-L1 120...250 V DC
Rated Power In W	30 W
Output Voltage	24 V DC
Power Supply Output Current	1.2 A

Complementary

Input Voltage Limits	85...264 V AC
Input Protection Type	Integrated fuse (not interchangeable)
Inrush Current	20 A
Power Factor	0.5 at 24 V DC
Efficiency	82 %
Output Voltage Adjustment	22.2...28.8 V adjustable
Power Dissipation In W	6.6 W
Current Consumption	0.4 A 240 V AC 0.65 A 100 V AC
Residual Ripple	250 mV
Output Protection Type	Against short-circuits
Connections - Terminals	Screw type terminals: 2 x 0.14...2 x 2.5 mm², (AWG 26...AWG 14) for input connection Screw type terminals: 4 x 0.14...4 x 2.5 mm², (AWG 26...AWG 14) for output connection
Status Led	1 LED (green) output voltage
Depth	59 mm
Height	100 mm
Width	54 mm
Net Weight	0.195 kg
Output Coupling	Parallel Series

Disclaimer: This documentation is not intended as a substitute for and is not to be used for determining suitability or reliability of these products for specific user applications

Marking	CE
Mounting Support	35 x 7.5 mm symmetrical DIN rail panel 2 screws, diameter : 4 mm 35 x 15 mm symmetrical DIN rail
Operating Position	Vertical
Supply	SELV conforming to EN/IEC 60950-1 SELV conforming to EN/IEC 60204-1 SELV conforming to IEC 60364-4-41
Dielectric Strength	3000 V with between input and output

Environment

Standards	UL 508 CSA C22.2 No 60950-1 EN/IEC 62368-1
Product Certifications	TUV 60950-1 EAC RCM KC CCSAus CSA 22-2 No 950 CULus 508
Environmental Characteristic	EMC conforming to EN 55022 class B EMC conforming to EN 61000-6-3 EMC conforming to EN/IEC 61000-6-2 EMC conforming to EN/IEC 61204-3 Safety conforming to EN/IEC 60950-1
Operating Altitude	2000 m
Ip Degree Of Protection	IP20 conforming to EN/IEC 60529
Ambient Air Temperature For Operation	-25…55 °C without derating mounting position A < 2000 m 55…70 °C with derating factor mounting position A < 2000 m

Packing Units

Unit Type Of Package 1	PCE
Number Of Units In Package 1	1

Contractual warranty

Warranty	18 months

Sustainability

Green Premium™ label is Schneider Electric's commitment to delivering products with best-in-class environmental performance. Green Premium promises compliance with the latest regulations, transparency on environmental impacts, as well as circular and low-CO_2 products.

Guide to assessing product sustainability is a white paper that clarifies global eco-label standards and how to interpret environmental declarations.

Learn more about Green Premium >

Guide to assess a product's sustainability >

Transparency RoHS/REACh

Well-being performance

Mercury Free	
Rohs Exemption Information	Yes
Pvc Free	

Certifications & Standards

Reach Regulation	REACh Declaration
Eu Rohs Directive	Pro-active compliance (Product out of EU RoHS legal scope)
China Rohs Regulation	China RoHS declaration
Environmental Disclosure	Product Environmental Profile
Circularity Profile	End of Life Information

Dimensions Drawings

Regulated Switch Mode Power Supplies

Dimensions

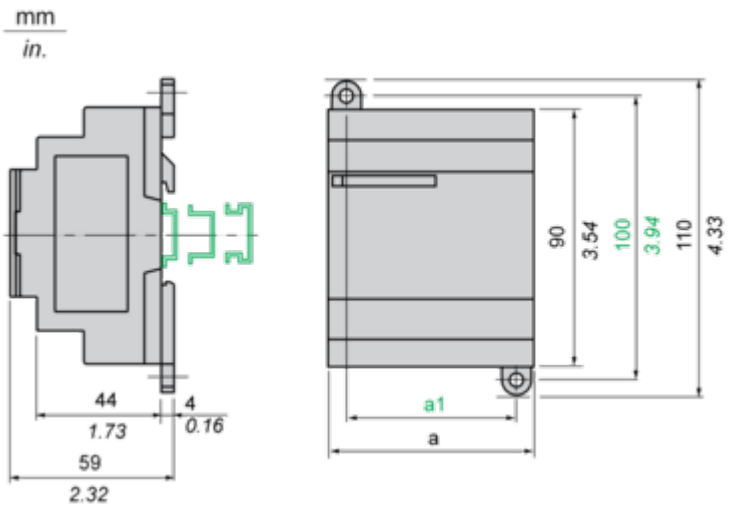

	a in mm	a in in.	a1 in mm	a1 in in.
ABL8MEM05040	54	2.12	42	1.65
ABL8MEM12020	54	2.12	42	1.65
ABL8MEM24003	36	1.41	24	0.94
ABL8MEM24006	36	1.41	24	0.94
ABL8MEM24012	54	2.12	42	1.65
ABL7RM24025	74	2.91	60	2.36

Connections and Schema

Regulated Switch Mode Power Supply

Internal Wiring Diagram

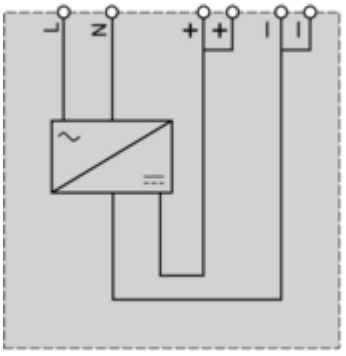

Regulated Switch Mode Power Supplies

Series or Parallel Connection

Series Connection

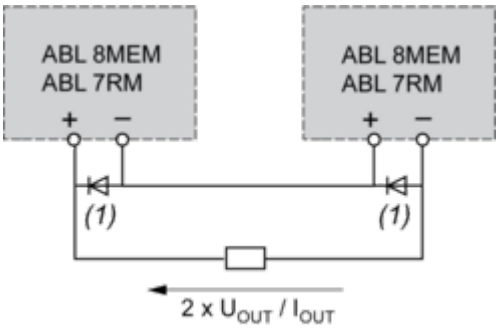

(1) Two Shottky diodes Imin = power supply In and Vmin = 50 V

Parallel Connection

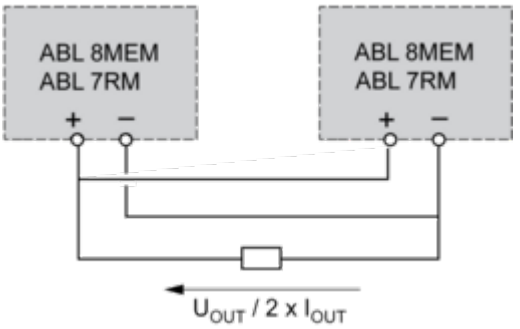

Family	Series	Parallel
ABL 7RM/8MEM	2 products max.	2 products max.

NOTE: Series or parallel connection is only recommended for products with identical references.

Performance Curves

Regulated Switch Mode Power Supplies

Derating

The ambient temperature is a determining factor that limits the power an electronic power supply can deliver continuously. If the temperature around the electronic components is too high, their life will be significantly reduced.
The nominal ambient temperature for the Modular range of Phaseo power supplies is 55°C. Above this temperature, derating is necessary up to a maximum temperature of 70°C (except for the ABL7RM24025 model).
The graph below shows the power as a percentage of the nominal power that the power supply can deliver continuously, depending on the ambient temperature.

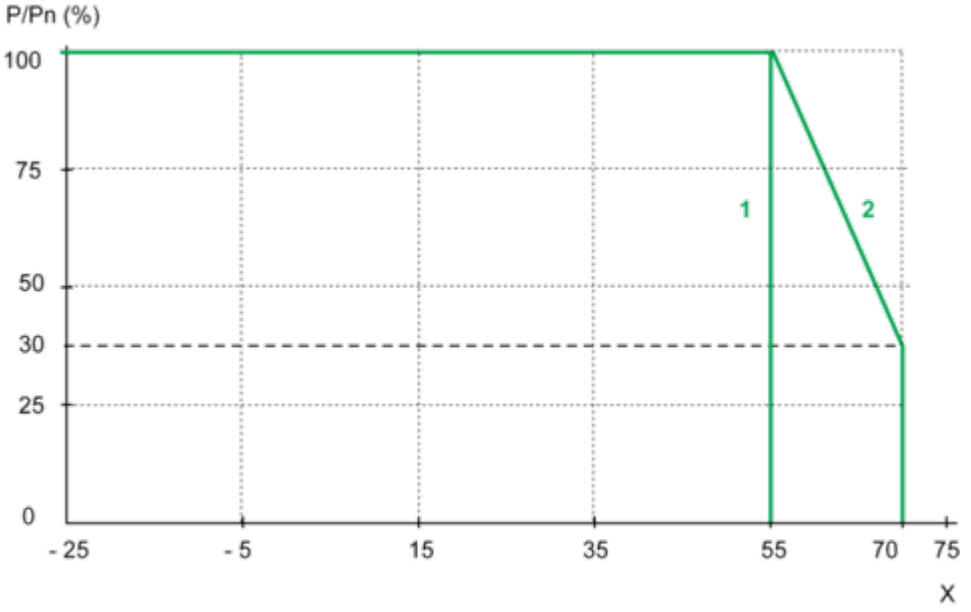

X Maximum operating temperature (°C)
(1) With an ABL7RM24025
(2) With an ABL8MEM•••••