Product datasheet

Specifications

Green Premium™

Variable speed drive, Altivar Machine ATV320, 0.75 kW, 380...500 V, 3 phases, enclosed

Local distributor code:

408900443 ATV320U07N4WS

EAN Code: 3606489548650

Main

Range Of Product	Altivar Machine ATV320
Product Or Component Type	Variable speed drive
Product Specific Application	Complex machines
Variant	With disconnect switch Standard version Standard version
Format Of The Drive	Enclosed
Mounting Mode	Wall mount
Communication Port Protocol	Modbus serial CANopen
Option Card	Communication module, CANopen Communication module, EtherCAT Communication module, Profibus DP V1 Communication module, PROFINET Communication module, Ethernet Powerlink Communication module, EtherNet/IP Communication module, DeviceNet
[Us] Rated Supply Voltage	380...500 V - 15...10 %
Nominal Output Current	2.3 A
Motor Power Kw	0.75 kW for heavy duty
Emc Filter	Class C2 EMC filter integrated
Ip Degree Of Protection	IP65

Complementary

Discrete Input Number	7
Discrete Input Type	STO safe torque off, 24 V DC, impedance: 1.5 kOhm DI1...DI6 logic inputs, 24 V DC (30 V) DI5 programmable as pulse input: 0…30 kHz, 24 V DC (30 V)
Discrete Input Logic	Positive logic (source) Negative logic (sink)
Discrete Output Number	3
Discrete Output Type	Open collector DQ+ 0…1 kHz 30 V DC 100 mA Open collector DQ- 0…1 kHz 30 V DC 100 mA
Analogue Input Number	3
Analogue Input Type	AI1 voltage: 0...10 V DC, impedance: 30 kOhm, resolution 10 bits AI2 bipolar differential voltage: +/- 10 V DC, impedance: 30 kOhm, resolution 10 bits AI3 current: 0...20 mA (or 4-20 mA, x-20 mA, 20-x mA or other patterns by configuration), impedance: 250 Ohm, resolution 10 bits
Analogue Output Number	1

Disclaimer: This documentation is not intended as a substitute for and is not to be used for determining suitability or reliability of these products for specific user applications

Analogue Output Type	Software-configurable current AQ1: 0...20 mA impedance 800 Ohm, resolution 10 bits Software-configurable voltage AQ1: 0...10 V DC impedance 470 Ohm, resolution 10 bits
Relay Output Type	Configurable relay logic R1A 1 NO electrical durability 100000 cycles Configurable relay logic R1B 1 NC electrical durability 100000 cycles Configurable relay logic R1C Configurable relay logic R2A 1 NO electrical durability 100000 cycles Configurable relay logic R2C
Maximum Switching Current	Relay output R1A, R1B, R1C on resistive load, cos phi = 1: 3 A at 250 V AC Relay output R1A, R1B, R1C on resistive load, cos phi = 1: 3 A at 30 V DC Relay output R1A, R1B, R1C, R2A, R2C on inductive load, cos phi = 0.4 and L/R = 7 ms: 2 A at 250 V AC Relay output R1A, R1B, R1C, R2A, R2C on inductive load, cos phi = 0.4 and L/R = 7 ms: 2 A at 30 V DC Relay output R2A, R2C on resistive load, cos phi = 1: 5 A at 250 V AC Relay output R2A, R2C on resistive load, cos phi = 1: 5 A at 30 V DC
Minimum Switching Current	Relay output R1A, R1B, R1C, R2A, R2C: 5 mA at 24 V DC
Method Of Access	Slave CANopen
4 Quadrant Operation Possible	True
Asynchronous Motor Control Profile	Voltage/frequency ratio, 5 points Flux vector control without sensor, standard Voltage/frequency ratio - Energy Saving, quadratic U/f Flux vector control without sensor - Energy Saving Voltage/frequency ratio, 2 points
Synchronous Motor Control Profile	Vector control without sensor
Transient Overtorque	170…200 % of nominal motor torque
Maximum Output Frequency	0.599 kHz
Acceleration And Deceleration Ramps	Linear U S CUS Ramp switching Acceleration/deceleration ramp adaptation Acceleration/deceleration automatic stop with DC injection
Motor Slip Compensation	Automatic whatever the load Adjustable 0...300 % Not available in voltage/frequency ratio (2 or 5 points)
Switching Frequency	2...16 kHz adjustable 4...16 kHz with derating factor
Nominal Switching Frequency	4 kHz
Braking To Standstill	By DC injection
Brake Chopper Integrated	True
Line Current	3.6 A at 380 V (heavy duty) 2.8 A at 500 V (heavy duty)
Maximum Input Current	3.6 A
Maximum Output Voltage	500 V
Apparent Power	2.4 kVA at 500 V (heavy duty)
Network Frequency	50...60 Hz
Relative Symmetric Network Frequency Tolerance	5 %
Prospective Line Isc	5 kA
Base Load Current At High Overload	14.3 A
Power Dissipation In W	Self-cooled: 32.0 W at 380 V, switching frequency 4 kHz
With Safety Function Safely Limited Speed (SIs)	True

With Safety Function Safe Brake Management (Sbc/Sbt)	False
With Safety Function Safe Operating Stop (Sos)	False
With Safety Function Safe Position (Sp)	False
With Safety Function Safe Programmable Logic	False
With Safety Function Safe Speed Monitor (Ssm)	False
With Safety Function Safe Stop 1 (Ss1)	True
With Sft Fct Safe Stop 2 (Ss2)	False
With Safety Function Safe Torque Off (Sto)	True
With Safety Function Safely Limited Position (Slp)	False
With Safety Function Safe Direction (Sdi)	False
Protection Type	Input phase breaks: drive Overcurrent between output phases and earth: drive Overheating protection: drive Short-circuit between motor phases: drive Thermal protection: drive
Width	250 mm
Height	340 mm
Depth	200 mm
Net Weight	6.3 kg

Environment

Operating Position	Vertical +/- 10 degree
Product Certifications	CE ATEX NOM GOST EAC RCM KC
Marking	CE ATEX UL CSA EAC RCM
Standards	IEC 61800-5-1
Electromagnetic Compatibility	Electrostatic discharge immunity test level 3 conforming to IEC 61000-4-2 Radiated radio-frequency electromagnetic field immunity test level 3 conforming to IEC 61000-4-3 Electrical fast transient/burst immunity test level 4 conforming to IEC 61000-4-4 1.2/50 µs - 8/20 µs surge immunity test level 3 conforming to IEC 61000-4-5 Conducted radio-frequency immunity test level 3 conforming to IEC 61000-4-6 Voltage dips and interruptions immunity test conforming to IEC 61000-4-11
Environmental Class (During Operation)	Class 3C3 according to IEC 60721-3-3 Class 3S2 according to IEC 60721-3-3
Maximum Acceleration Under Shock Impact (During Operation)	150 m/s² at 11 ms
Maximum Acceleration Under Vibrational Stress (During Operation)	10 m/s² at 13...200 Hz
Maximum Deflection Under Vibratory Load (During Operation)	1.5 mm at 2...13 Hz
Permitted Relative Humidity (During Operation)	Class 3K5 according to EN 60721-3

Overvoltage Category	III
Regulation Loop	Adjustable PID regulator
Speed Accuracy	+/- 10 % of nominal slip 0.2 Tn to Tn
Pollution Degree	3
Ambient Air Transport Temperature	-25…70 °C
Ambient Air Temperature For Operation	-10…40 °C without derating 40…60 °C with derating factor
Ambient Air Temperature For Storage	-25…70 °C

Packing Units

Unit Type Of Package 1	PCE
Number Of Units In Package 1	1
Package 1 Height	26.0 cm
Package 1 Width	30.5 cm
Package 1 Length	45.0 cm
Package 1 Weight	8.3 kg

Contractual warranty

Warranty	18 months

Sustainability

Green Premium™ label is Schneider Electric's commitment to delivering products with best-in-class environmental performance. Green Premium promises compliance with the latest regulations, transparency on environmental impacts, as well as circular and low-CO_2 products.

Guide to assessing product sustainability is a white paper that clarifies global eco-label standards and how to interpret environmental declarations.

Learn more about Green Premium >

Guide to assess a product's sustainability >

Transparency RoHS/REACh

Resource performance

- Upgraded Components Available

Well-being performance

- Mercury Free
- Rohs Exemption Information — Yes

Certifications & Standards

Reach Regulation	REACh Declaration
Eu Rohs Directive	Pro-active compliance (Product out of EU RoHS legal scope)
China Rohs Regulation	China RoHS declaration
Environmental Disclosure	Product Environmental Profile
Weee	The product must be disposed on European Union markets following specific waste collection and never end up in rubbish bins
Circularity Profile	End of Life Information

Dimensions Drawings

Dimensions

Front and Left View

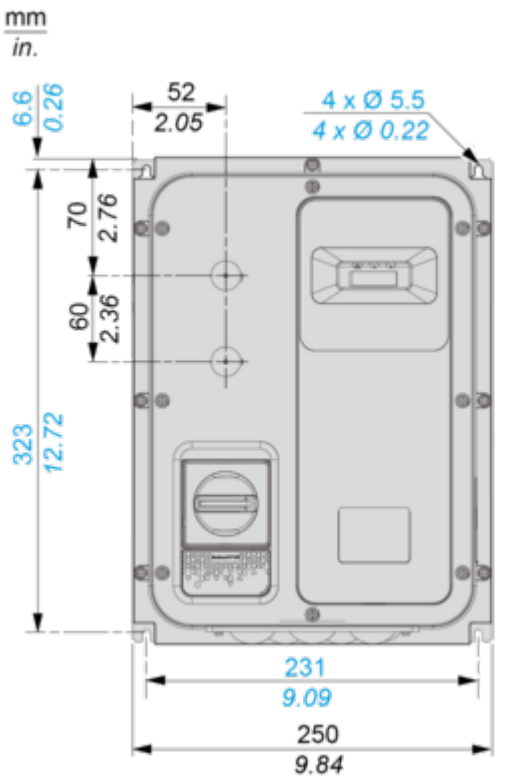

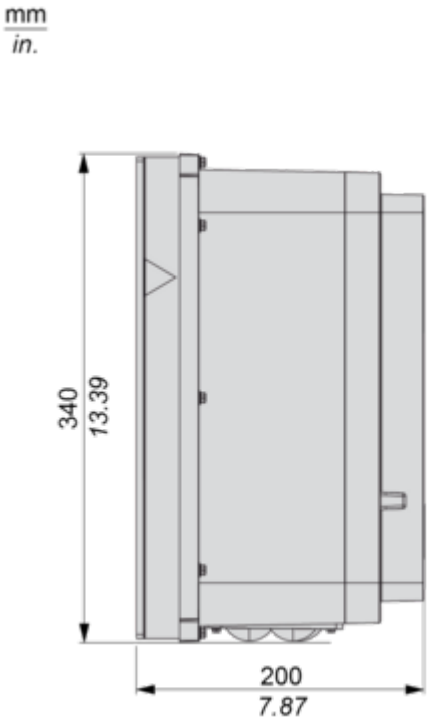

Mounting and Clearance

Mounting and Clearance

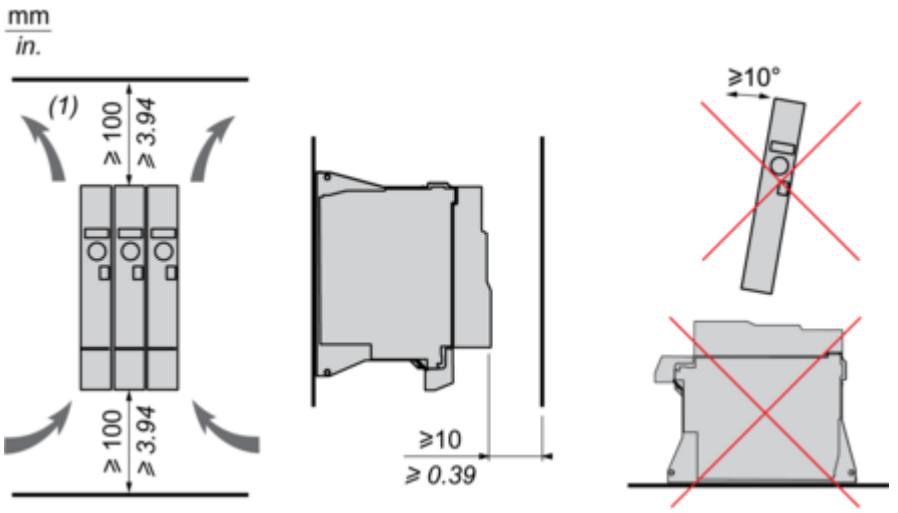

(1) Minimum value corresponding to thermal constraints.

Connections and Schema

Connection Diagrams

Diagram with Line Contactor

Connection diagrams conforming to standards ISO13849 category 1 and IEC/EN 61508 capacity SIL1, stopping category 0 in accordance with standard IEC/EN 60204-1.

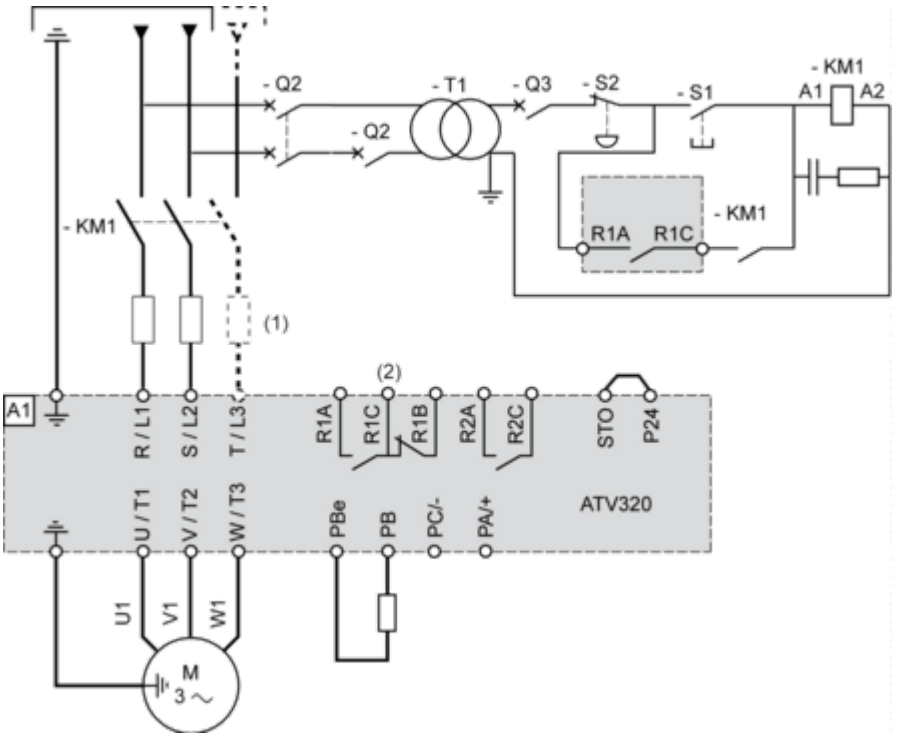

(1) Line choke (if used)
(2) Fault relay contacts, for remote signaling of drive status

Diagram with Switch Disconnect

Connection diagrams conforming to standards EN 954-1 category 1 and IEC/EN 61508 capacity SIL1, stopping category 0 in accordance with standard IEC/EN 60204-1.

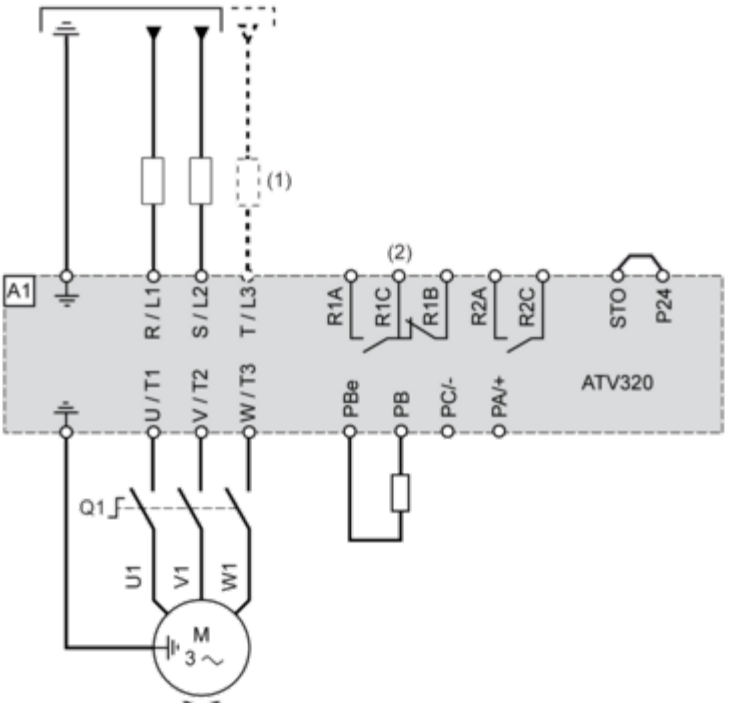

(1) Line choke (if used)
(2) Fault relay contacts, for remote signaling of drive status

Control Connection Diagram in Source Mode

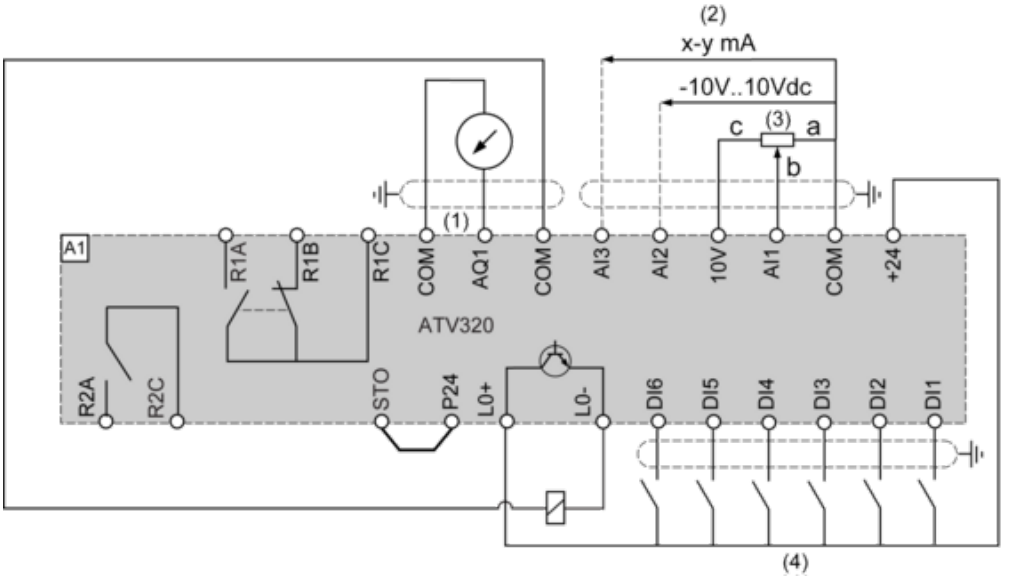

(1) Analog output
(2) Analog inputs
(3) Reference potentiometer (10 kOhm maxi)
(4) Digital inputs

Digital Inputs Wiring

The logic input switch (SW1) is used to adapt the operation of the logic inputs to the technology of the programmable controller outputs.
Switch SW1 set to “Source” position and use of the output power supply for the DIs.

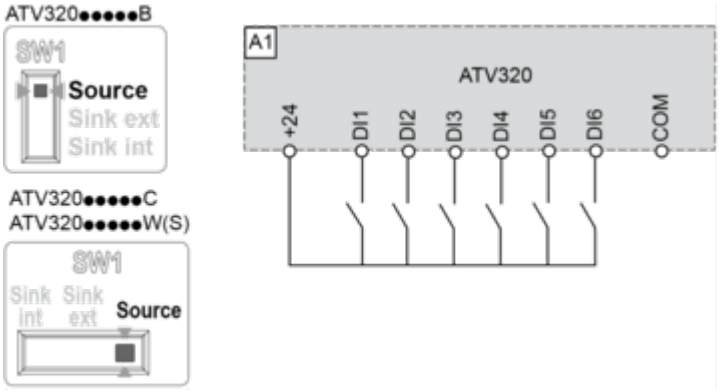

Switch SW1 set to “Source” position and use of an external power supply for the DIs.

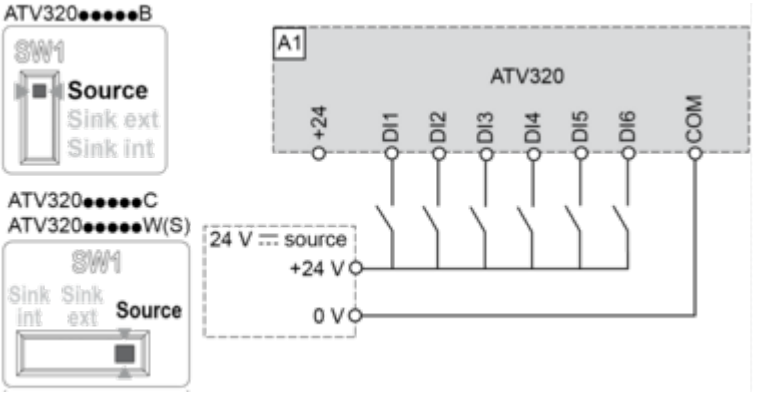

Switch SW1 set to “Sink Int” position and use of the output power supply for the DIs.

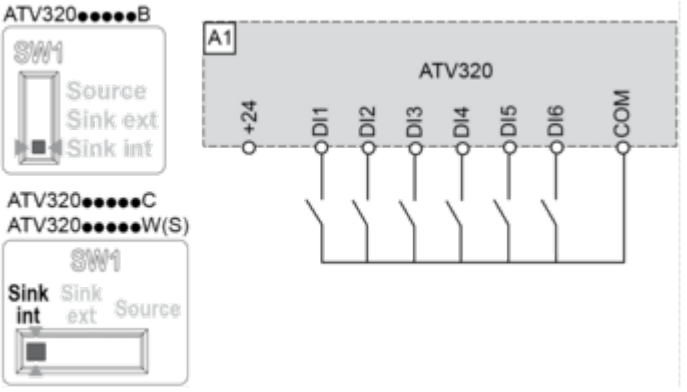

Switch SW1 set to “Sink Ext” position and use of an external power supply for the DIs.

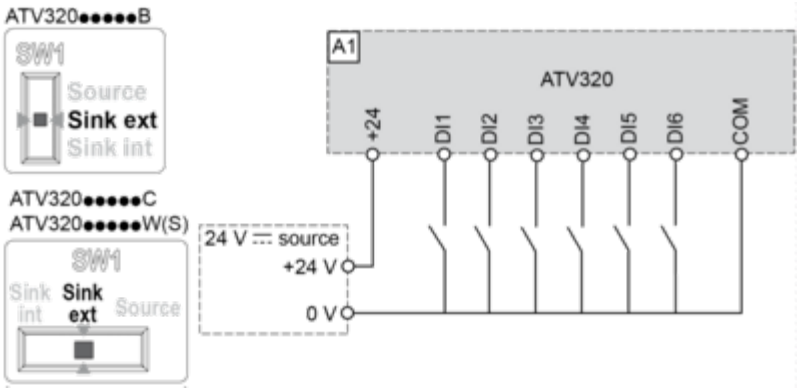
ATV320●●●●●B
SW1
Source
Sink ext
Sink int
ATV320●●●●●C
ATV320●●●●●W(S)
SW1
Sink int
Sink ext
Source
A1
ATV320
+24
DI1
DI2
DI3
DI4
DI5
DI6
COM
24 V ⎓ source
+24 V
0 V