# Product datasheet

Specifications

Green Premium™

## variable speed drive, ATV320, 1.1 kW, 200…240 V, 1 phase, book

Local distributor code:

403009174 ATV320U11M2B

**EAN Code: 3606480966354**

## Main

| | |
|---|---|
| **Range Of Product** | Altivar Machine ATV320 |
| **Product Or Component Type** | Variable speed drive |
| **Product Specific Application** | Complex machines |
| **Variant** | Standard version<br>Standard version |
| **Format Of The Drive** | Book |
| **Mounting Mode** | Cabinet mount |
| **Communication Port Protocol** | Modbus serial<br>CANopen |
| **Option Card** | Communication module, CANopen<br>Communication module, EtherCAT<br>Communication module, Profibus DP V1<br>Communication module, PROFINET<br>Communication module, Ethernet Powerlink<br>Communication module, EtherNet/IP<br>Communication module, DeviceNet |
| **[Us] Rated Supply Voltage** | 200...240 V - 15...10 % |
| **Nominal Output Current** | 6.9 A |
| **Motor Power Kw** | 1.1 kW for heavy duty |
| **Emc Filter** | Class C2 EMC filter integrated |
| **Ip Degree Of Protection** | IP20 |

## Complementary

| | |
|---|---|
| **Discrete Input Number** | 7 |
| **Discrete Input Type** | STO safe torque off, 24 V DC, impedance: 1.5 kOhm<br>DI1...DI6 logic inputs, 24 V DC (30 V)<br>DI5 programmable as pulse input: 0…30 kHz, 24 V DC (30 V) |
| **Discrete Input Logic** | Positive logic (source)<br>Negative logic (sink) |
| **Discrete Output Number** | 3 |
| **Discrete Output Type** | Open collector DQ+ 0…1 kHz 30 V DC 100 mA<br>Open collector DQ- 0…1 kHz 30 V DC 100 mA |
| **Analogue Input Number** | 3 |
| **Analogue Input Type** | AI1 voltage: 0...10 V DC, impedance: 30 kOhm, resolution 10 bits<br>AI2 bipolar differential voltage: +/- 10 V DC, impedance: 30 kOhm, resolution 10 bits<br>AI3 current: 0...20 mA (or 4-20 mA, x-20 mA, 20-x mA or other patterns by configuration), impedance: 250 Ohm, resolution 10 bits |
| **Analogue Output Number** | 1 |

Disclaimer: This documentation is not intended as a substitute for and is not to be used for determining suitability or reliability of these products for specific user applications

| | |
|---|---|
| **Analogue Output Type** | Software-configurable current AQ1: 0...20 mA impedance 800 Ohm, resolution 10 bits<br>Software-configurable voltage AQ1: 0...10 V DC impedance 470 Ohm, resolution 10 bits |
| **Relay Output Type** | Configurable relay logic R1A 1 NO electrical durability 100000 cycles<br>Configurable relay logic R1B 1 NC electrical durability 100000 cycles<br>Configurable relay logic R1C<br>Configurable relay logic R2A 1 NO electrical durability 100000 cycles<br>Configurable relay logic R2C |
| **Maximum Switching Current** | Relay output R1A, R1B, R1C on resistive load, cos phi = 1: 3 A at 250 V AC<br>Relay output R1A, R1B, R1C on resistive load, cos phi = 1: 3 A at 30 V DC<br>Relay output R1A, R1B, R1C, R2A, R2C on inductive load, cos phi = 0.4 and L/R = 7 ms: 2 A at 250 V AC<br>Relay output R1A, R1B, R1C, R2A, R2C on inductive load, cos phi = 0.4 and L/R = 7 ms: 2 A at 30 V DC<br>Relay output R2A, R2C on resistive load, cos phi = 1: 5 A at 250 V AC<br>Relay output R2A, R2C on resistive load, cos phi = 1: 5 A at 30 V DC |
| **Minimum Switching Current** | Relay output R1A, R1B, R1C, R2A, R2C: 5 mA at 24 V DC |
| **Method Of Access** | Slave CANopen |
| **4 Quadrant Operation Possible** | True |
| **Asynchronous Motor Control Profile** | Voltage/frequency ratio, 5 points<br>Flux vector control without sensor, standard<br>Voltage/frequency ratio - Energy Saving, quadratic U/f<br>Flux vector control without sensor - Energy Saving<br>Voltage/frequency ratio, 2 points |
| **Synchronous Motor Control Profile** | Vector control without sensor |
| **Transient Overtorque** | 170…200 % of nominal motor torque |
| **Maximum Output Frequency** | 0.599 kHz |
| **Acceleration And Deceleration Ramps** | Linear<br>U<br>S<br>CUS<br>Ramp switching<br>Acceleration/deceleration ramp adaptation<br>Acceleration/deceleration automatic stop with DC injection |
| **Motor Slip Compensation** | Automatic whatever the load<br>Adjustable 0...300 %<br>Not available in voltage/frequency ratio (2 or 5 points) |
| **Switching Frequency** | 2...16 kHz adjustable<br>4...16 kHz with derating factor |
| **Nominal Switching Frequency** | 4 kHz |
| **Braking To Standstill** | By DC injection |
| **Brake Chopper Integrated** | True |
| **Line Current** | 13.6 A at 200 V (heavy duty)<br>11.5 A at 240 V (heavy duty) |
| **Maximum Input Current** | 13.6 A |
| **Maximum Output Voltage** | 240 V |
| **Apparent Power** | 2.8 kVA at 240 V (heavy duty) |
| **Network Frequency** | 50...60 Hz |
| **Relative Symmetric Network Frequency Tolerance** | 5 % |
| **Prospective Line Isc** | 1 kA |
| **Base Load Current At High Overload** | 33.0 A |
| **Power Dissipation In W** | Fan: 62.0 W at 200 V, switching frequency 4 kHz |
| **With Safety Function Safely Limited Speed (Sls)** | True |

| | |
|---|---|
| **With Safety Function Safe Brake Management (Sbc/Sbt)** | False |
| **With Safety Function Safe Operating Stop (Sos)** | False |
| **With Safety Function Safe Position (Sp)** | False |
| **With Safety Function Safe Programmable Logic** | False |
| **With Safety Function Safe Speed Monitor (Ssm)** | False |
| **With Safety Function Safe Stop 1 (Ss1)** | True |
| **With Sft Fct Safe Stop 2 (Ss2)** | False |
| **With Safety Function Safe Torque Off (Sto)** | True |
| **With Safety Function Safely Limited Position (Slp)** | False |
| **With Safety Function Safe Direction (Sdi)** | False |
| **Protection Type** | Input phase breaks: drive<br>Overcurrent between output phases and earth: drive<br>Overheating protection: drive<br>Short-circuit between motor phases: drive<br>Thermal protection: drive |
| **Width** | 60 mm |
| **Height** | 325.0 mm |
| **Depth** | 245.0 mm |
| **Net Weight** | 2.9 kg |

# Environment

| | |
|---|---|
| **Operating Position** | Vertical +/- 10 degree |
| **Product Certifications** | CE<br>ATEX<br>NOM<br>GOST<br>EAC<br>RCM<br>KC |
| **Marking** | CE<br>ATEX<br>UL<br>CSA<br>EAC<br>RCM |
| **Standards** | IEC 61800-5-1 |
| **Electromagnetic Compatibility** | Electrostatic discharge immunity test level 3 conforming to IEC 61000-4-2<br>Radiated radio-frequency electromagnetic field immunity test level 3 conforming to IEC 61000-4-3<br>Electrical fast transient/burst immunity test level 4 conforming to IEC 61000-4-4<br>1.2/50 µs - 8/20 µs surge immunity test level 3 conforming to IEC 61000-4-5<br>Conducted radio-frequency immunity test level 3 conforming to IEC 61000-4-6<br>Voltage dips and interruptions immunity test conforming to IEC 61000-4-11 |
| **Environmental Class (During Operation)** | Class 3C3 according to IEC 60721-3-3<br>Class 3S2 according to IEC 60721-3-3 |
| **Maximum Acceleration Under Shock Impact (During Operation)** | 150 m/s² at 11 ms |
| **Maximum Acceleration Under Vibrational Stress (During Operation)** | 10 m/s² at 13...200 Hz |
| **Maximum Deflection Under Vibratory Load (During Operation)** | 1.5 mm at 2...13 Hz |
| **Permitted Relative Humidity (During Operation)** | Class 3K5 according to EN 60721-3 |

| | |
|---|---|
| **Volume Of Cooling Air** | 11.3 m3/h |
| **Overvoltage Category** | III |
| **Regulation Loop** | Adjustable PID regulator |
| **Speed Accuracy** | +/- 10 % of nominal slip 0.2 Tn to Tn |
| **Pollution Degree** | 2 |
| **Ambient Air Transport Temperature** | -25…70 °C |
| **Ambient Air Temperature For Operation** | -10…50 °C without derating<br>50…60 °C with derating factor |
| **Ambient Air Temperature For Storage** | -25…70 °C |

## Packing Units

| | |
|---|---|
| **Unit Type Of Package 1** | PCE |
| **Number Of Units In Package 1** | 1 |
| **Package 1 Height** | 9.700 cm |
| **Package 1 Width** | 27.500 cm |
| **Package 1 Length** | 32.500 cm |
| **Package 1 Weight** | 2.666 kg |
| **Unit Type Of Package 2** | P06 |
| **Number Of Units In Package 2** | 20 |
| **Package 2 Height** | 75.000 cm |
| **Package 2 Width** | 60.000 cm |
| **Package 2 Length** | 80.000 cm |
| **Package 2 Weight** | 63.310 kg |

## Contractual warranty

| | |
|---|---|
| **Warranty** | 18 months |

## Sustainability

**Green Premium™ label** is Schneider Electric's commitment to delivering products with best-in-class environmental performance. Green Premium promises compliance with the latest regulations, transparency on environmental impacts, as well as circular and low-$CO_2$ products.

**Guide to assessing product sustainability** is a white paper that clarifies global eco-label standards and how to interpret environmental declarations.

Learn more about Green Premium >

Guide to assess a product's sustainability >

Transparency RoHS/REACh

## Resource performance

Upgraded Components Available

## Well-being performance

Mercury Free

Rohs Exemption Information Yes

## Certifications & Standards

| | |
|---|---|
| **Reach Regulation** | REACh Declaration |
| **Eu Rohs Directive** | Pro-active compliance (Product out of EU RoHS legal scope) |
| **China Rohs Regulation** | China RoHS declaration |
| **Environmental Disclosure** | Product Environmental Profile |
| **Weee** | The product must be disposed on European Union markets following specific waste collection and never end up in rubbish bins |
| **Circularity Profile** | End of Life Information |

# Dimensions Drawings

## Dimensions

### Bottom, Right and Front View

mm
in.

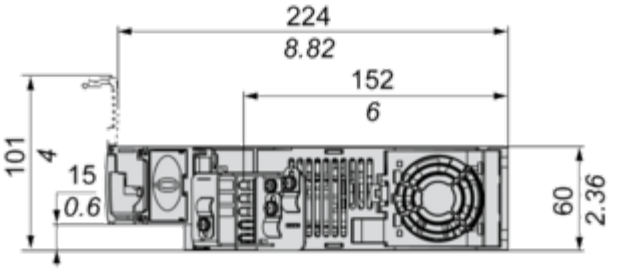
224
8.82
152
6
101
4
15
0.6
60
2.36

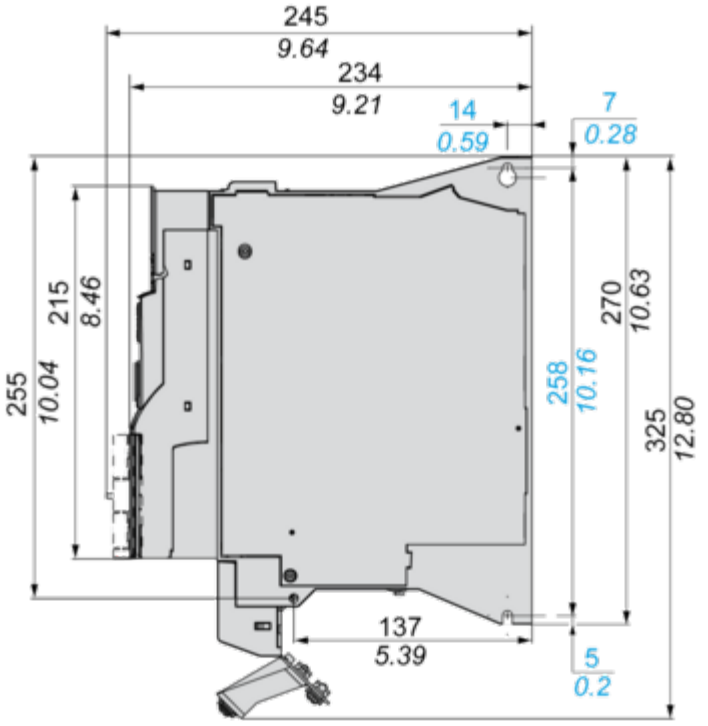
245
9.64
234
9.21
14
0.59
7
0.28
255
10.04
215
8.46
258
10.16
270
10.63
325
12.80
137
5.39
5
0.2

mm
in.

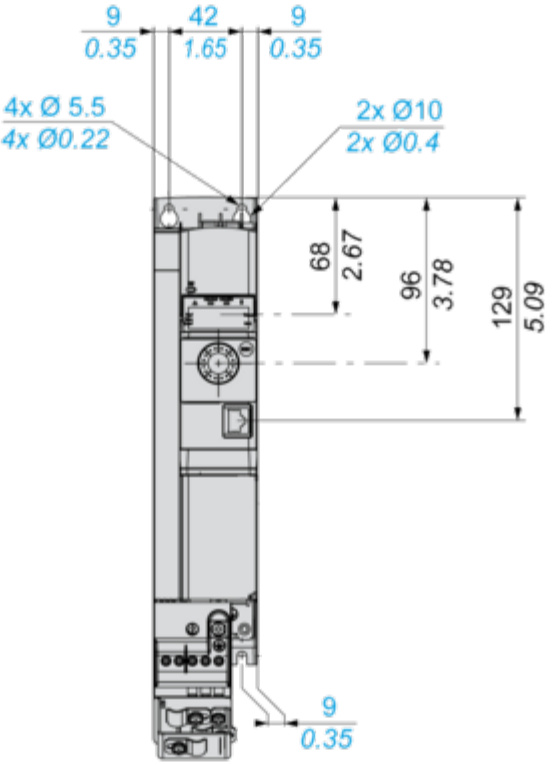
9
0.35
42
1.65
9
0.35
4x Ø 5.5
4x Ø0.22
2x Ø10
2x Ø0.4
68
2.67
96
3.78
129
5.09
9
0.35

Mounting and Clearance

## Mounting and Clearance

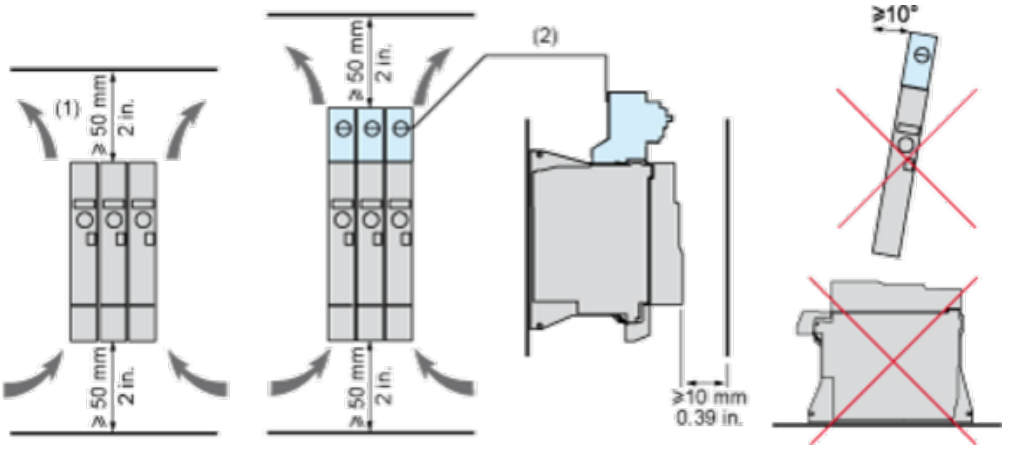


**(1)** Minimum value corresponding to thermal constraints.
**(2)** Optional GV2 circuit-breaker

**Option: Protection Device, GV2 circuit-breaker**

**NOTE:** The product overall height dimension, including GV2 adapter and EMC plate mounted, becomes 424 mm (16.7 in.) instead of 325 mm (12.80 in.)

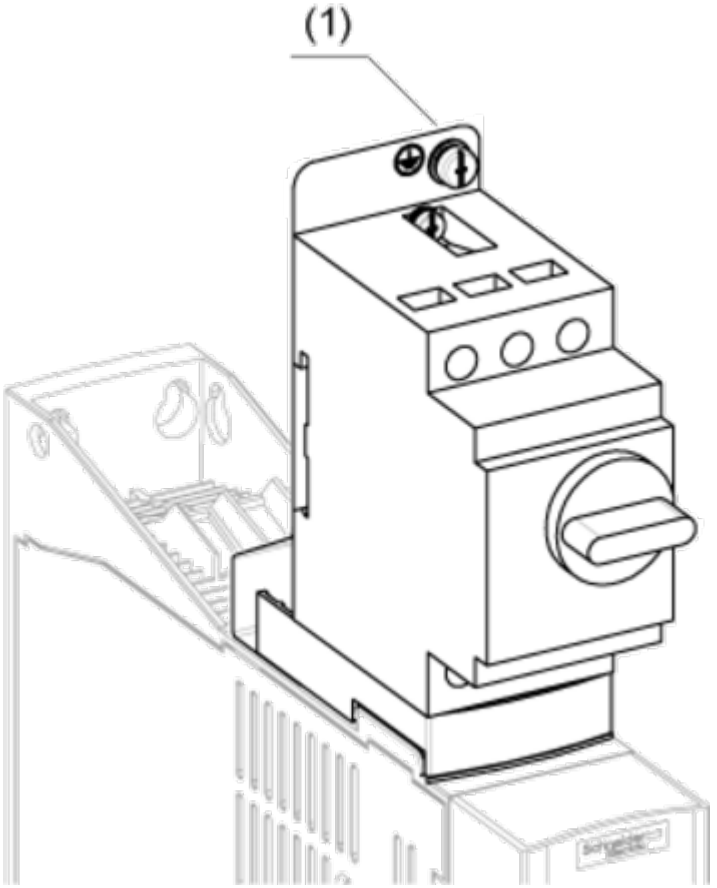


**(1)** Ground screw (HS type 2 - 5x12)

# Connections and Schema

## Connection Diagrams

### Diagram with Line Contactor

Connection diagrams conforming to standards ISO13849 category 1 and IEC/EN 61508 capacity SIL1, stopping category 0 in accordance with standard IEC/EN 60204-1.

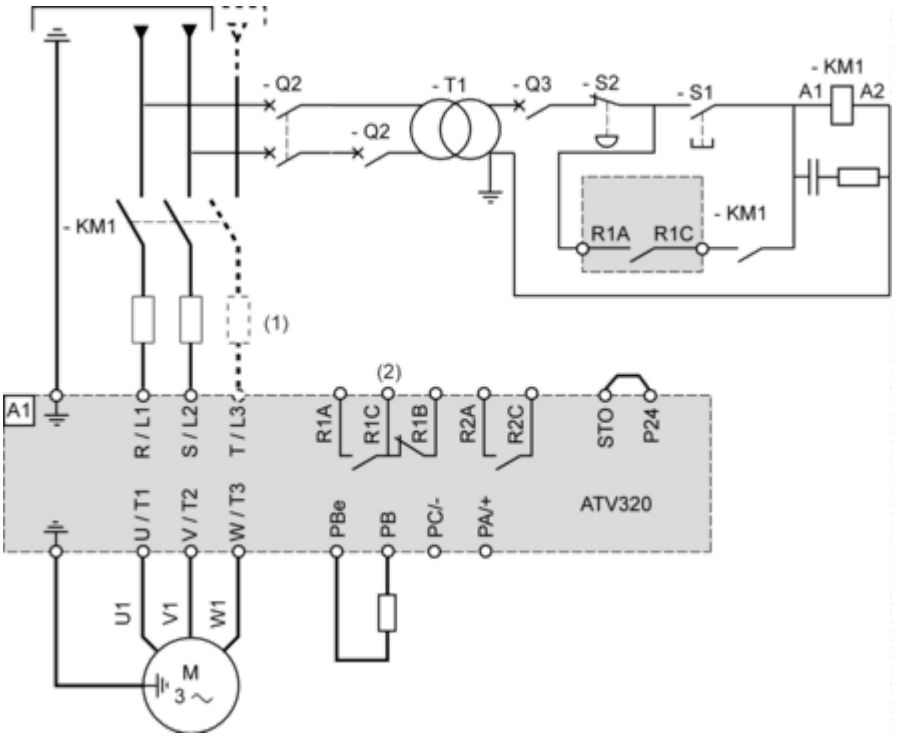


**(1)** Line choke (if used)
**(2)** Fault relay contacts, for remote signaling of drive status

### Diagram with Switch Disconnect

Connection diagrams conforming to standards EN 954-1 category 1 and IEC/EN 61508 capacity SIL1, stopping category 0 in accordance with standard IEC/EN 60204-1.

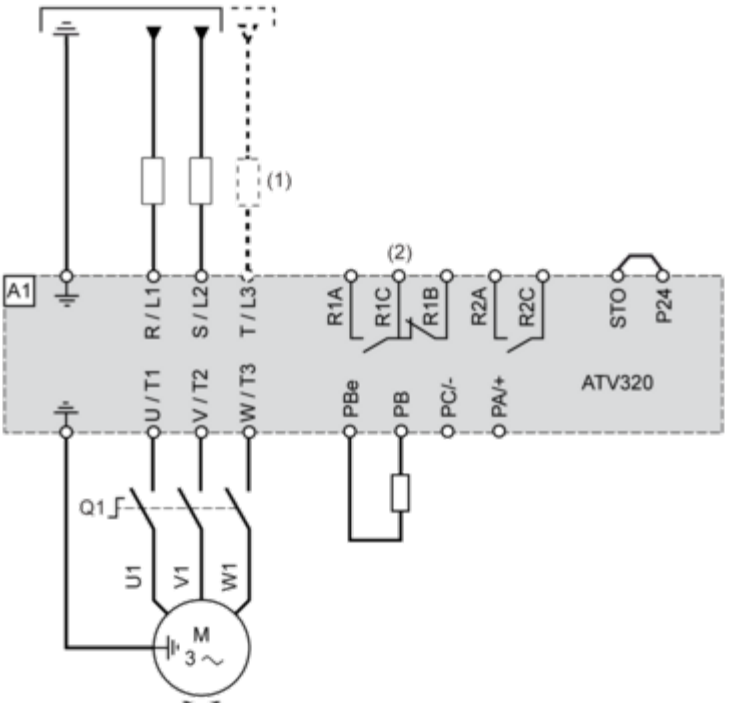


**(1)** Line choke (if used)
**(2)** Fault relay contacts, for remote signaling of drive status

## Control Connection Diagram in Source Mode

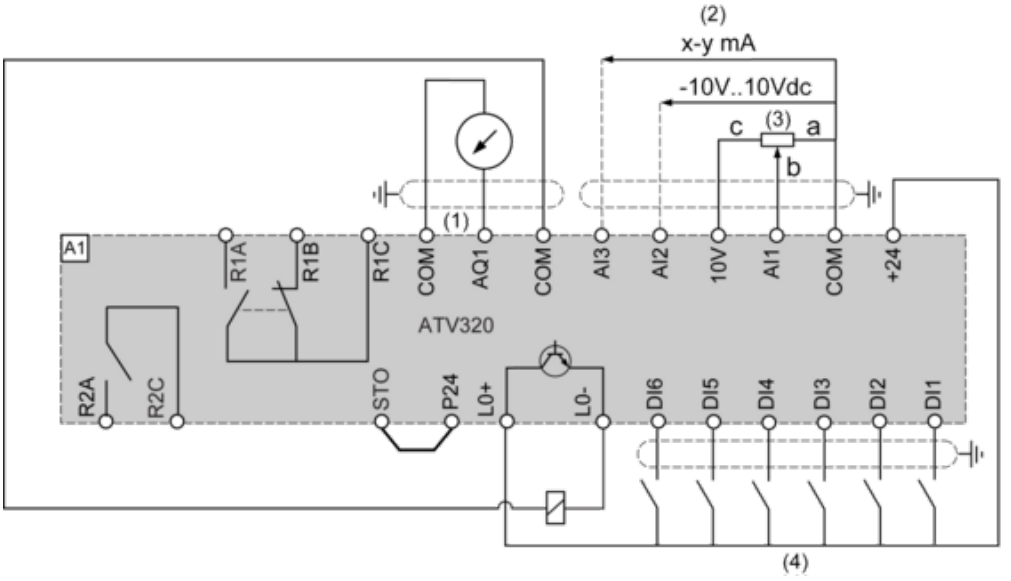


**(1)** Analog output
**(2)** Analog inputs
**(3)** Reference potentiometer (10 kOhm maxi)
**(4)** Digital inputs

## Digital Inputs Wiring

The logic input switch (SW1) is used to adapt the operation of the logic inputs to the technology of the programmable controller outputs.
Switch SW1 set to “Source” position and use of the output power supply for the DIs.

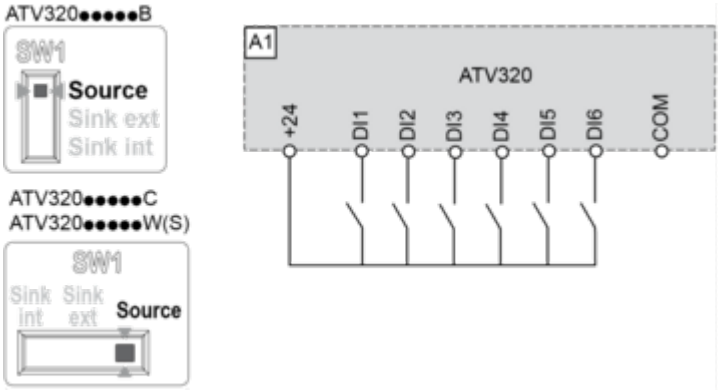


Switch SW1 set to “Source” position and use of an external power supply for the DIs.

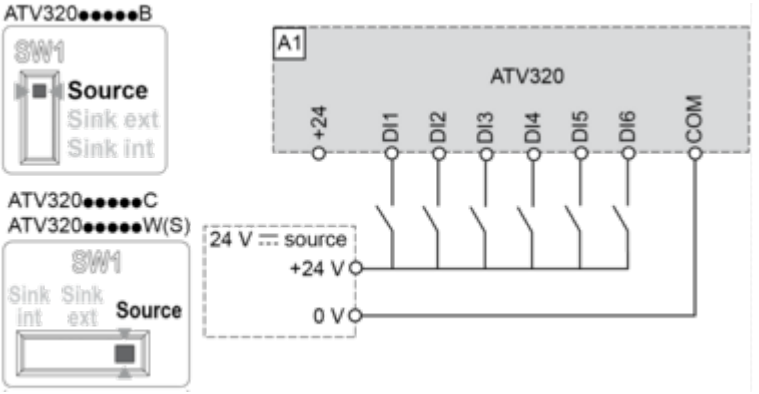


Switch SW1 set to “Sink Int” position and use of the output power supply for the DIs.

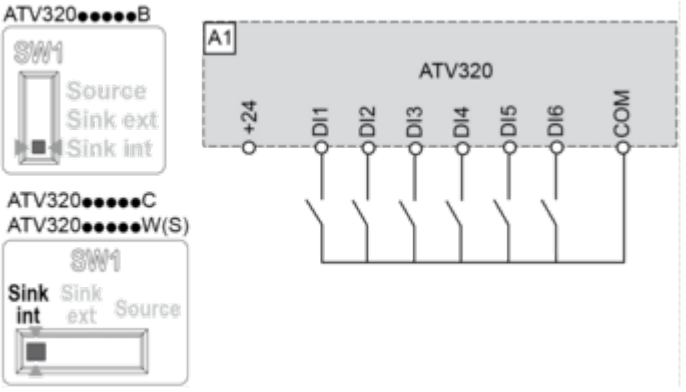


Switch SW1 set to “Sink Ext” position and use of an external power supply for the DIs.

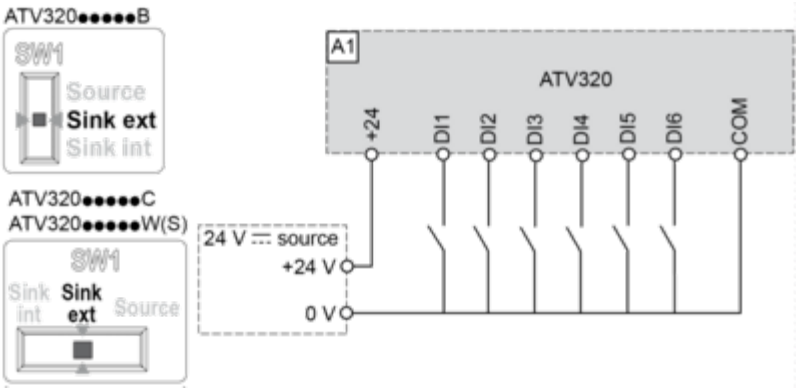
ATV320●●●●●B
SW1
Source
Sink ext
Sink int
ATV320●●●●●C
ATV320●●●●●W(S)
SW1
Sink int
Sink ext
Source
A1
ATV320
+24
DI1
DI2
DI3
DI4
DI5
DI6
COM
24 V ⎓ source
+24 V
0 V

## Performance Curves

### Derating Curves

Derating curve for the nominal drive current (In) as a function of temperature and switching frequency (SF).

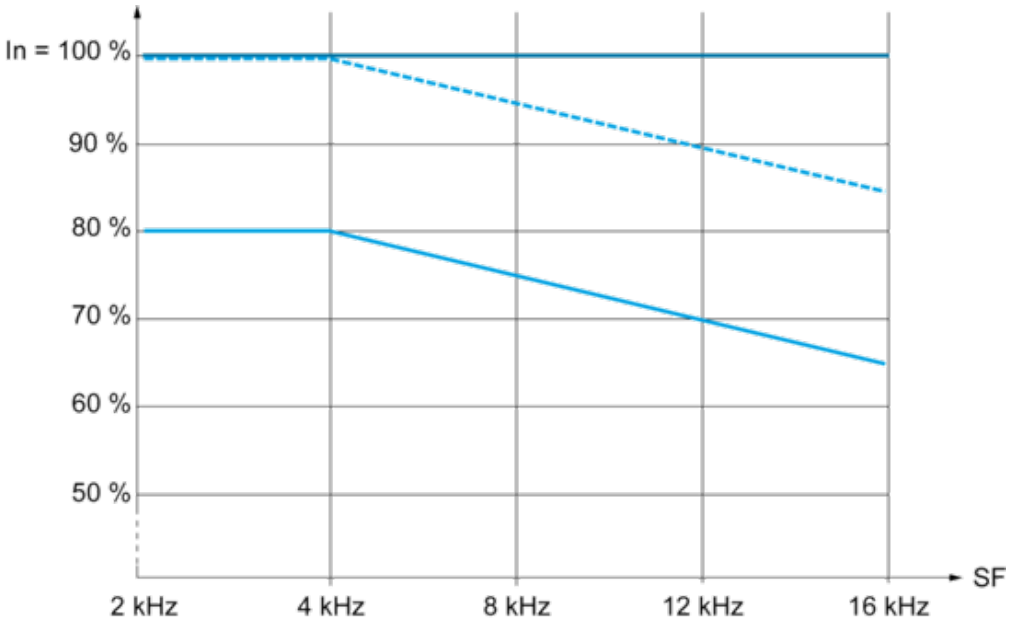


40 °C (104 °F) - Mounting type A, B and C
50 °C (122 °F) - Mounting type A, B and C
60 °C (140 °F) - Mounting type B and C
**In :** Nominal Drive Current
**SF :** Switching Frequency