Product datasheet

Specifications

TeSys GV2 - Adaptor plate - with 3P connection

Local distributor code:

21099184 GK2AF01

EAN Code: 3389110255966

Main

Range Of Product	TeSys GV2 TeSys Deca
Range	TeSys
Device Short Name	GK2AF
Product Or Component Type	Adaptor plate
Accessory / Separate Part Category	Mounting accessory
Product Compatibility	LC1D09...D25 LC1K

Complementary

Height	135 mm
Width	54 mm
Depth	24 mm
Net Weight	0.12 kg

Packing Units

Unit Type Of Package 1	PCE
Number Of Units In Package 1	1
Package 1 Height	3.600 cm
Package 1 Width	13.800 cm
Package 1 Length	6.300 cm
Package 1 Weight	70.000 g
Unit Type Of Package 2	S02
Number Of Units In Package 2	40
Package 2 Height	15.000 cm
Package 2 Width	30.000 cm
Package 2 Length	40.000 cm
Package 2 Weight	3.205 kg
Unit Type Of Package 3	P06
Number Of Units In Package 3	640
Package 3 Height	75.000 cm
Package 3 Width	60.000 cm

Disclaimer: This documentation is not intended as a substitute for and is not to be used for determining suitability or reliability of these products for specific user applications

Package 3 Length	80.000 cm
Package 3 Weight	61.860 kg

Contractual warranty

Warranty	18 months

Sustainability

Green Premium™ label is Schneider Electric's commitment to delivering products with best-in-class environmental performance. Green Premium promises compliance with the latest regulations, transparency on environmental impacts, as well as circular and low-CO_2 products.

Guide to assessing product sustainability is a white paper that clarifies global eco-label standards and how to interpret environmental declarations.

Learn more about Green Premium >

Guide to assess a product's sustainability >

Transparency RoHS/REACh

Well-being performance

Mercury Free

Rohs Exemption Information	Yes

Certifications & Standards

Reach Regulation	REACh Declaration
Eu Rohs Directive	Compliant with Exemptions
China Rohs Regulation	China RoHS declaration Product out of China RoHS scope. Substance declaration for your information
Environmental Disclosure	Product Environmental Profile
Weee	The product must be disposed on European Union markets following specific waste collection and never end up in rubbish bins
Circularity Profile	End of Life Information

Dimensions Drawings
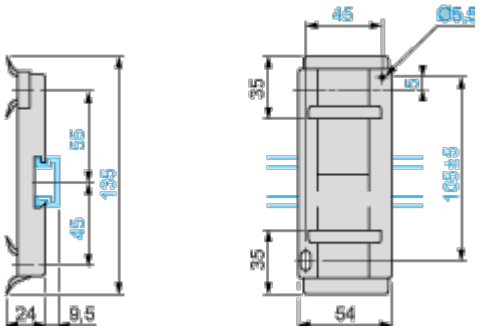
Adapter Plate GK2AF01