# Product datasheet

Specifications

Green Premium™

## touch panel screen 3"4 Monochrome W/P/R

HMISTO512

Discontinued on: 27 Dec 2019

To be end-of-service on: 31 Dec 2025

Discontinued

**EAN Code: 3595864089706**

## Main

| | |
|---|---|
| **Range Of Product** | Harmony STO & STU |
| **Product Or Component Type** | Touch panel screen |
| **Software Designation** | Vijeo Designer |
| **Operating System** | Harmony |
| **Processor Name** | CPU RISC |

## Complementary

| | |
|---|---|
| **Display Size** | 3.4 inch |
| **Display Type** | Backlit monochrome STN LCD |
| **Background Colour** | White, pink and red |
| **Display Resolution** | 200 x 80 pixels |
| **Touch Panel** | Analogue |
| **Backlight Lifespan** | 10000 hours with red<br>50000 hours with pink<br>50000 hours with white |
| **Brightness** | 8 levels |
| **Contrast** | 16 levels via touch panel |
| **Character Font** | Japanese (ANK, Kanji)<br>Korean<br>ASCII<br>Taiwanese (traditional Chinese)<br>Chinese (simplified Chinese) |
| **[Us] Rated Supply Voltage** | 24 V DC +/- 20 % |
| **Inrush Current** | 30 A |
| **Local Signalling** | 1 LED (green) for normal operation |
| **Power Consumption In W** | 5 W |
| **Number Of Pages** | Limited by internal memory capacity |
| **Processor Frequency** | 333 MHz |
| **Memory Description** | Application memory 16 MB<br>Back up of data 128 kB |
| **Integrated Connection Type** | 1 USB 2.0 type mini B<br>1 USB 2.0 type A<br>power supply - removable screw terminal block<br>COM1 serial link - female RJ45 - RS232C/RS485 (rate: <= 115.2 kbits/s) |
| **Supply** | External source |

Disclaimer: This documentation is not intended as a substitute for and is not to be used for determining suitability or reliability of these products for specific user applications

| | |
|---|---|
| **Realtime Clock** | Access to the PLC real-time clock |
| **Downloadable Protocols** | Third party protocols<br>Uni-TE<br>Modbus |
| **Fixing Mode** | By 2 spring clips, mounting on 1.6...5 mm thick panel |
| **Enclosure Material** | PPT |
| **Marking** | CE |
| **Height** | 77.5 mm |
| **Width** | 116.5 mm |
| **Depth** | 36.5 mm |

## Environment

| | |
|---|---|
| **Immunity To Microbreaks** | 3 ms |
| **Standards** | FCC Class A<br>UL 1604<br>UL 508<br>IEC 61000-6-2<br>EN 61131-2 |
| **Product Certifications** | UL Class 1 Division 2 T4A<br>UL Class 1 Division 2 T5<br>C-Tick<br>cULus<br>GOST<br>CE<br>KCC |
| **Ambient Air Temperature For Operation** | 0…50 °C |
| **Ambient Air Temperature For Storage** | -20…60 °C |
| **Relative Humidity** | 0…90 % without condensation |
| **Operating Altitude** | <= 2000 m |
| **Ip Degree Of Protection** | IP20 (rear panel) conforming to IEC 60529<br>IP65 (front panel) conforming to IEC 60529 |
| **Nema Degree Of Protection** | NEMA 4X front panel (indoor use) |
| **Shock Resistance** | 15 gn for 11 ms conforming to IEC 60068-2-27 |
| **Vibration Resistance** | +/- 3.5 mm (f = 5…9 Hz) conforming to IEC 60068-2-6<br>1 gn (f = 9…150 Hz) conforming to IEC 60068-2-6 |
| **Electromagnetic Compatibility** | Resistance to radiated electromagnetic fields - test level: 10 V/m conforming to IEC 61000-4-3 |

## Packing Units

| | |
|---|---|
| **Unit Type Of Package 1** | PCE |
| **Number Of Units In Package 1** | 1 |
| **Package 1 Height** | 9.0 cm |
| **Package 1 Width** | 13.0 cm |
| **Package 1 Length** | 18.5 cm |
| **Package 1 Weight** | 360.0 g |

## Contractual warranty

| | |
|---|---|
| **Warranty** | 18 months |

## Sustainability

**Green Premium™ label** is Schneider Electric's commitment to delivering products with best-in-class environmental performance. Green Premium promises compliance with the latest regulations, transparency on environmental impacts, as well as circular and low-$CO_2$ products.

**Guide to assessing product sustainability** is a white paper that clarifies global eco-label standards and how to interpret environmental declarations.

Learn more about Green Premium >

Guide to assess a product's sustainability >

Transparency RoHS/REACh

## Well-being performance

- Reach Free Of Svhc
- Mercury Free
- Rohs Exemption Information — Yes

## Certifications & Standards

| | |
|---|---|
| **Reach Regulation** | REACh Declaration |
| **Eu Rohs Directive** | Pro-active compliance (Product out of EU RoHS legal scope) |
| **China Rohs Regulation** | China RoHS declaration |
| **Environmental Disclosure** | Product Environmental Profile |
| **Weee** | The product must be disposed on European Union markets following specific waste collection and never end up in rubbish bins |
| **Circularity Profile** | End of Life Information |

## Dimensions Drawings

### Dimensions with Spring Clips

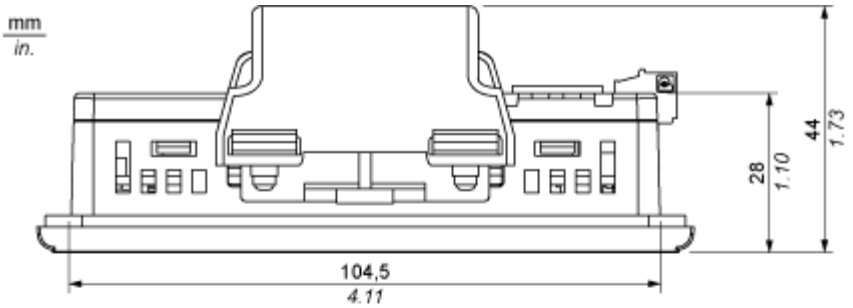


(1)

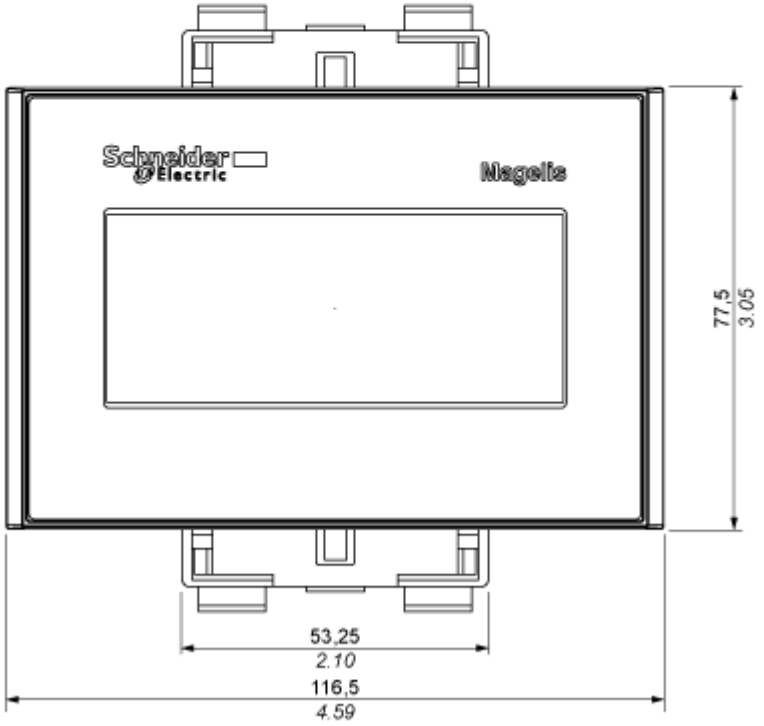


(2)

**(1)** Top

**(2)** Front

## Dimensions without Spring Clips

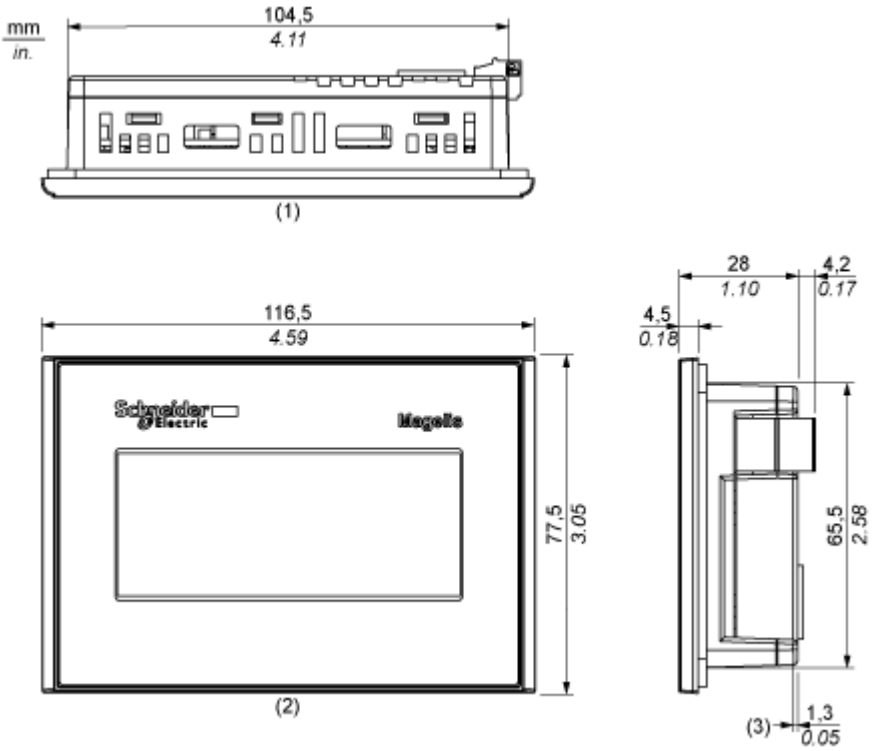


**(1)** Top

**(2)** Front

**(3)** Right Side

Mounting and Clearance

## Clearance

mm
in.

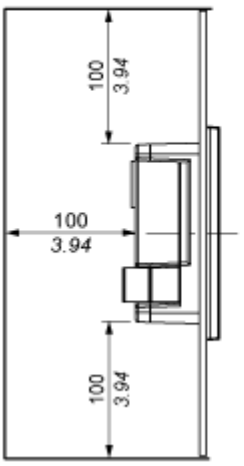


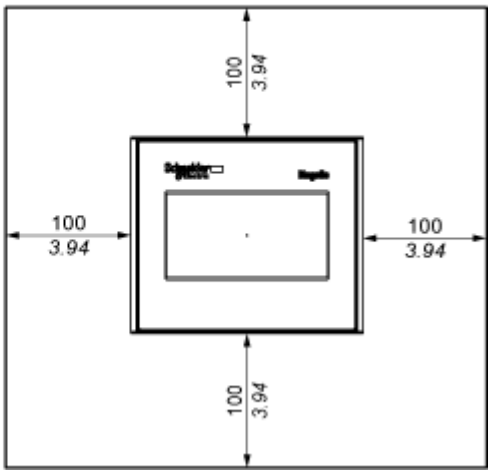

## Panel Cut-out Dimensions

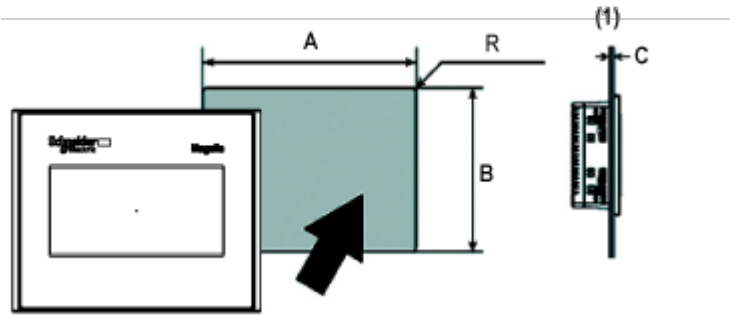


**(1)** Panel

| A (mm) | A (in.) | B (mm) | B (in.) | C (mm) Spring Clips | C (in.) Spring Clips | R (mm) | R (in.) |
|---|---|---|---|---|---|---|---|
| +1<br>105<br>-0 | +0.04<br>4.13<br>-0 | +1<br>66<br>-0 | +0.04<br>2.59<br>-0 | 1.5 to 6.0 | 0.059 to 0.236 | 2.0 to 3.0 | 0.078 to 0.118 |