Product datasheet

Specifications

Green Premium™

Discontinued

integrated drive ILA with servo motor - 24..36 V - Profibus DP - indus connector

ILA1B571TC1A0

Discontinued on: 23 May 2023

To be end-of-service on: 31 Dec 2026

EAN Code: 3389119225236

Main

Range Of Product	Lexium integrated drive
Product Or Component Type	Motion integrated drive
Device Short Name	ILA
Motor Type	AC synchronous servo motor
Number Of Motor Poles	6
Network Number Of Phases	Single phase
[Us] Rated Supply Voltage	24 V 36 V
Network Type	DC
Communication Interface	Profibus DP, integrated
Length	145.3 mm
Winding Type	High speed of rotation and medium torque
Electrical Connection	Industrial connector
Holding Brake	Without
Gear Box Type	Without
Nominal Speed	5100 rpm at 24 V 7500 rpm at 36 V
Nominal Torque	0.26 N.m

Complementary

Transmission Rate	9.6, 19.2, 45.45, 93.75, 187.5, 500, 1500, 3000, 6000 and 12000 kbauds
Mounting Support	Flange
Motor Flange Size	57 mm
Number Of Motor Stacks	1
Centring Collar Diameter	50 mm
Centring Collar Depth	1.6 mm
Number Of Mounting Holes	4
Mounting Holes Diameter	5.2 mm
Circle Diameter Of The Mounting Holes	66.6 mm
Feedback Type	Single turn encoder

Disclaimer: This documentation is not intended as a substitute for and is not to be used for determining suitability or reliability of these products for specific user applications

Shaft End	Untapped
Second Shaft	Without second shaft end
Shaft Diameter	9 mm
Shaft Length	20 mm
Supply Voltage Limits	18…40 V
Current Consumption	11000 mA peak 7500 mA maximum continuous
Associated Fuse Rating	10 A
Input/Output Type	4 signals (each be used as input or output)
Voltage State 0 Guaranteed	-3...4.5 V
Voltage State 1 Guaranteed	15...30 V
Discrete Input Current	10 mA at 24 V on/STO_A for safety input 3 mA at 24 V on/STO_B for safety input 2 mA at 24 V for 24 V signal interface
Discrete Output Voltage	23...25 V
Maximum Switching Current	100 mA per output 200 mA total
Protection Type	Overload of output voltage Safe torque off Short circuit of the output voltage
Peak Stall Torque	0.43 N.m
Continuous Stall Torque	0.26 N.m
Speed Feedback Resolution	16384 points/turn
Accuracy Error	+/- 0.05 °
Rotor Inertia	0.1 kg.cm²
Maximum Radial Force Fr	89 N
Maximum Axial Force Fa	104 N (force pressure) 104 N (tensile force)
Service Life In Hours	20000 h bearing
Marking	CE
Type Of Cooling	Natural convection
Net Weight	1.4 kg

Environment

Standards	EN 61800-3 : 2001-02 EN/IEC 61800-3 EN 50347 IEC 60072-1 EN/IEC 50178 EN 61800-3:2001, second environment IEC 61800-3, Ed 2
Product Certifications	TÜV UL cUL
Ambient Air Temperature For Operation	50…65 °C (with power derating of 2 % per °C) 0…50 °C (without derating)
Permissible Ambient Air Temperature Around The Device	105 °C power amplifier 110 °C motor
Ambient Air Temperature For Storage	-25…70 °C

Operating Altitude	<= 1000 m without derating
Relative Humidity	15…85 % without condensation
Vibration Resistance	20 m/s² (f= 10…500 Hz) 10 cycles conforming to EN/IEC 60068-2-6
Shock Resistance	150 m/s² 1000 shocks conforming to EN/IEC 60068-2-29
Ip Degree Of Protection	IP41 shaft bushing: conforming to EN/IEC 60034-5 IP54 total except shaft bushing: conforming to EN/IEC 60034-5

Packing Units

Unit Type Of Package 1	PCE
Number Of Units In Package 1	1
Package 1 Height	8.0 cm
Package 1 Width	19.0 cm
Package 1 Length	39.0 cm
Package 1 Weight	1.8 kg

Contractual warranty

Warranty	18 months

Sustainability

Green Premium™ label is Schneider Electric's commitment to delivering products with best-in-class environmental performance. Green Premium promises compliance with the latest regulations, transparency on environmental impacts, as well as circular and low-CO_2 products.

Guide to assessing product sustainability is a white paper that clarifies global eco-label standards and how to interpret environmental declarations.

Learn more about Green Premium >

Guide to assess a product's sustainability >

Transparency RoHS/REACh

Well-being performance

Mercury Free	
Rohs Exemption Information	Yes
Pvc Free	

Certifications & Standards

Reach Regulation	REACh Declaration
Eu Rohs Directive	Pro-active compliance (Product out of EU RoHS legal scope)
China Rohs Regulation	China RoHS declaration
Environmental Disclosure	Product Environmental Profile
Weee	The product must be disposed on European Union markets following specific waste collection and never end up in rubbish bins
Circularity Profile	End of Life Information

Dimensions Drawings

Integrated Drive without Holding Brake

Dimensions

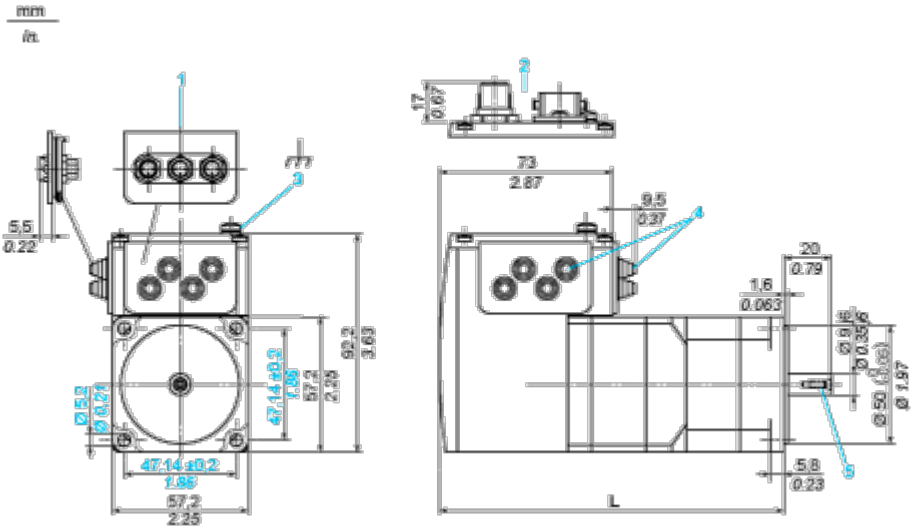

1 Accessories: I/O signal insert with industrial connectors

2 Option: industrial connectors

3 Earth (ground) terminal

4 Accessories: cable entries Ø = 3 ... 9 mm/0.12 ... 0.35 in.

5 Centring hole DIN 332 - DS M3

L 145.3 mm/5.72 in.

Connections and Schema

Connection Example with 4 I/O Signals

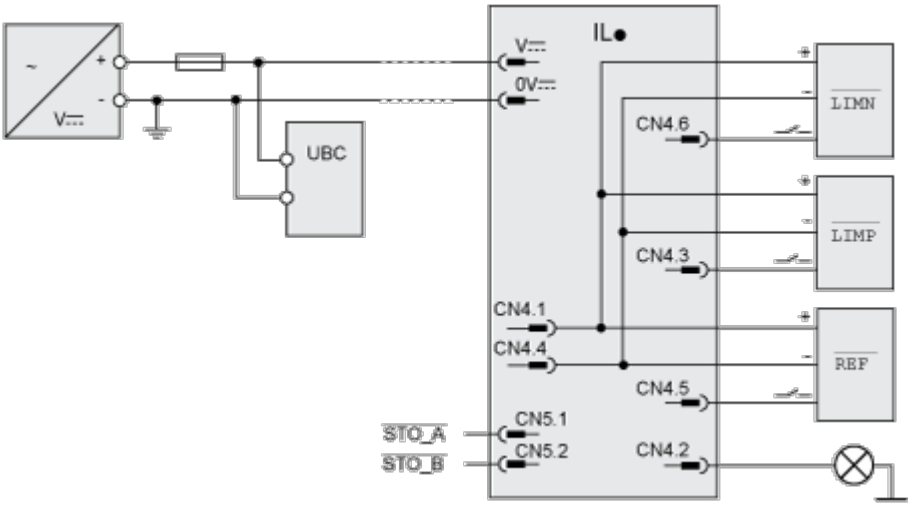

Performance Curves

Torque Characteristics

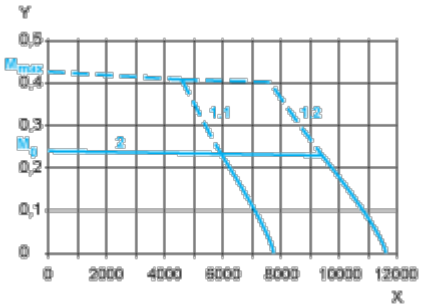

X Speed of rotation in rpm

Y Torque in Nm

1.1 Max. torque at 24 V

1.2 Max. torque at 36 V

2 Continuous torque