Product datasheet

Specifications

Green Premium™

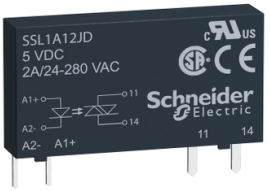

Solid state relay, 2 A, zero voltage switching, input 15...30 V DC, output 24...280 V AC

Local distributor code:

403013568 SSL1A12BD

EAN Code: 3606480579721

Main

Range Of Product	Harmony Solid State Relays
Product Or Component Type	Solid state relay up to 10 A
Device Short Name	SSL
Network Number Of Phases	1 phase
Output Switching Mode	DC switching

Complementary

Mounting Support	Socket
[In] Rated Current	2 A
Output Voltage	24...280 V AC
[Uc] Control Circuit Voltage	15...30 V DC
Capacitance Unbalance	1.5 pF input/output
Minimum Switching Voltage	15 V DC turn-on
Maximum Switching Voltage	10 V DC turn-off
Input Current Limits	6 mA
Input Impedance	3500 Ohm
Solid State Output Type	Zero voltage switching SCR output
Load Current	0.07…2 A
Tansient Overvoltage	600 V AC
Surge Current	120 A for 16.6 ms 115 A for 20 ms
Maximum Voltage Drop	<1.1 V on-state
Maximum I²T For Fusing	66 A².s for 10 ms at 50 Hz 60 A².s for 8.3 ms at 60 Hz
Maximum Leakage Current	4 mA off-state
Dv/Dt	500 V/µs off-state at maximum voltage
Response Time	0.5 cycle (turn-on) 0.5 cycle (turn-off)
Overvoltage Category	III
Width	5 mm
Height	28 mm
Depth	15 mm

Disclaimer: This documentation is not intended as a substitute for and is not to be used for determining suitability or reliability of these products for specific user applications

Net Weight	0.0041 kg

Environment

Flame Retardance	V0 conforming to UL 94
Dielectric Strength	2500 V for input/output
Pollution Degree	2
Product Certifications	UL CSA
Marking	CE
Ambient Air Temperature For Operation	-20…80 °C
Ambient Air Temperature For Storage	-20…85 °C

Packing Units

Unit Type Of Package 1	PCE
Number Of Units In Package 1	1
Package 1 Height	0.7 cm
Package 1 Width	2.5 cm
Package 1 Length	37 cm
Package 1 Weight	5 g
Unit Type Of Package 2	BB1
Number Of Units In Package 2	12
Package 2 Height	0.7 cm
Package 2 Width	2.5 cm
Package 2 Length	37 cm
Package 2 Weight	61 g
Unit Type Of Package 3	S01
Number Of Units In Package 3	1080
Package 3 Height	15 cm
Package 3 Width	15 cm
Package 3 Length	40 cm
Package 3 Weight	5.684 kg

Contractual warranty

Warranty	18 months

Sustainability

Green Premium™ label is Schneider Electric's commitment to delivering products with best-in-class environmental performance. Green Premium promises compliance with the latest regulations, transparency on environmental impacts, as well as circular and low-CO_2 products.

Guide to assessing product sustainability is a white paper that clarifies global eco-label standards and how to interpret environmental declarations.

Learn more about Green Premium >

Guide to assess a product's sustainability >

Transparency RoHS/REACh

Well-being performance

Reach Free Of Svhc	
Mercury Free	
Rohs Exemption Information	Yes

Certifications & Standards

Reach Regulation	REACh Declaration
Eu Rohs Directive	Pro-active compliance (Product out of EU RoHS legal scope)
China Rohs Regulation	China RoHS declaration
Environmental Disclosure	Product Environmental Profile
Circularity Profile	End of Life Information

Dimensions Drawings

Dimensions

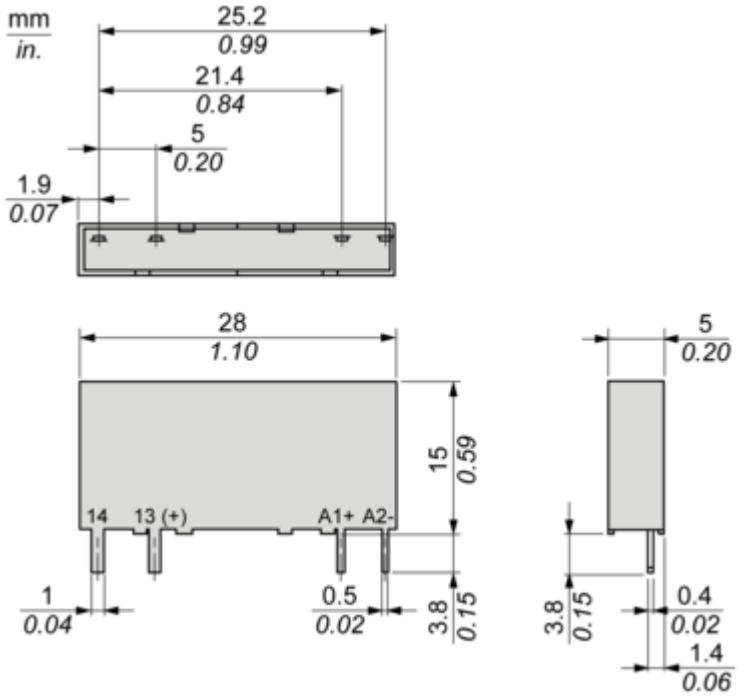

Performance Curves

Derating Curves

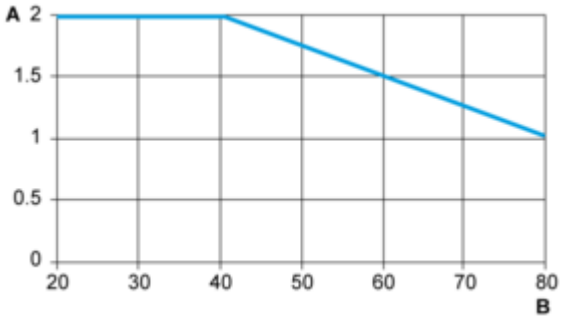

A : Load Current (Amperes)
B : Ambient Temperature (°C)