# Product datasheet

Specifications

Green Premium™

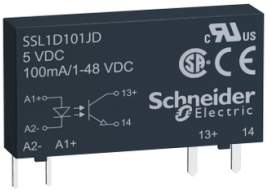


## Solid state relay, 0.1 A, DC switching, input 16…30 V DC, output 1…48 V DC

Local distributor code:

403013694 SSL1D101BD

**EAN Code: 3606480579684**

## Main

| | |
|---|---|
| **Range Of Product** | Harmony Solid State Relays |
| **Product Or Component Type** | Solid state relay up to 10 A |
| **Device Short Name** | SSL |
| **Network Number Of Phases** | 1 phase |
| **Output Switching Mode** | DC switching |

## Complementary

| | |
|---|---|
| **Mounting Support** | Socket |
| **[In] Rated Current** | 0.1 A |
| **Output Voltage** | 1...48 V DC |
| **[Uc] Control Circuit Voltage** | 16...30 V DC |
| **Capacitance Unbalance** | 1.5 pF input/output |
| **Minimum Switching Voltage** | 16 V DC turn-on |
| **Maximum Switching Voltage** | 9 V DC turn-off |
| **Input Current Limits** | 5 mA |
| **Input Impedance** | 3500 Ohm |
| **Solid State Output Type** | DC switching<br>Transistor output |
| **Load Current** | 0.001…0.1 A |
| **Tansient Overvoltage** | 60 V DC |
| **Maximum Operating Frequency** | 500 Hz |
| **Surge Current** | 0.3 A for 10 ms |
| **Maximum Voltage Drop** | <1 V on-state |
| **Maximum Leakage Current** | 0.001 mA off-state |
| **Response Time** | 0.02 ms (turn-on)<br>0.13 ms (turn-off) |
| **Overvoltage Category** | III |
| **Width** | 5 mm |
| **Height** | 28 mm |
| **Depth** | 15 mm |
| **Net Weight** | 0.0041 kg |

Disclaimer: This documentation is not intended as a substitute for and is not to be used for determining suitability or reliability of these products for specific user applications

## Environment

| | |
|---|---|
| **Flame Retardance** | V0 conforming to UL 94 |
| **Dielectric Strength** | 3750 V for input/output |
| **Pollution Degree** | 2 |
| **Product Certifications** | CSA<br>UL |
| **Marking** | CE |
| **Ambient Air Temperature For Operation** | -20…80 °C |
| **Ambient Air Temperature For Storage** | -20…85 °C |

## Packing Units

| | |
|---|---|
| **Unit Type Of Package 1** | PCE |
| **Number Of Units In Package 1** | 1 |
| **Package 1 Height** | 0.700 cm |
| **Package 1 Width** | 2.500 cm |
| **Package 1 Length** | 37.000 cm |
| **Package 1 Weight** | 4.000 g |
| **Unit Type Of Package 2** | BB1 |
| **Number Of Units In Package 2** | 12 |
| **Package 2 Height** | 0.700 cm |
| **Package 2 Width** | 2.500 cm |
| **Package 2 Length** | 37.000 cm |
| **Package 2 Weight** | 62.000 g |
| **Unit Type Of Package 3** | S01 |
| **Number Of Units In Package 3** | 1080 |
| **Package 3 Height** | 15.000 cm |
| **Package 3 Width** | 15.000 cm |
| **Package 3 Length** | 40.000 cm |
| **Package 3 Weight** | 5.684 kg |

## Contractual warranty

| | |
|---|---|
| **Warranty** | 18 months |

## Sustainability

**Green Premium™ label** is Schneider Electric's commitment to delivering products with best-in-class environmental performance. Green Premium promises compliance with the latest regulations, transparency on environmental impacts, as well as circular and low-$CO_2$ products.

**Guide to assessing product sustainability** is a white paper that clarifies global eco-label standards and how to interpret environmental declarations.

Learn more about Green Premium >

Guide to assess a product's sustainability >

Transparency RoHS/REACh

## Well-being performance

| | |
|---|---|
| Reach Free Of Svhc | |
| Toxic Heavy Metal Free | |
| Mercury Free | |
| Rohs Exemption Information | Yes |

## Certifications & Standards

| | |
|---|---|
| **Reach Regulation** | REACh Declaration |
| **Eu Rohs Directive** | Pro-active compliance (Product out of EU RoHS legal scope)<br>EU RoHS Declaration |
| **China Rohs Regulation** | China RoHS declaration |
| **Environmental Disclosure** | Product Environmental Profile |
| **Circularity Profile** | End of Life Information |

Dimensions Drawings

**Dimensions**

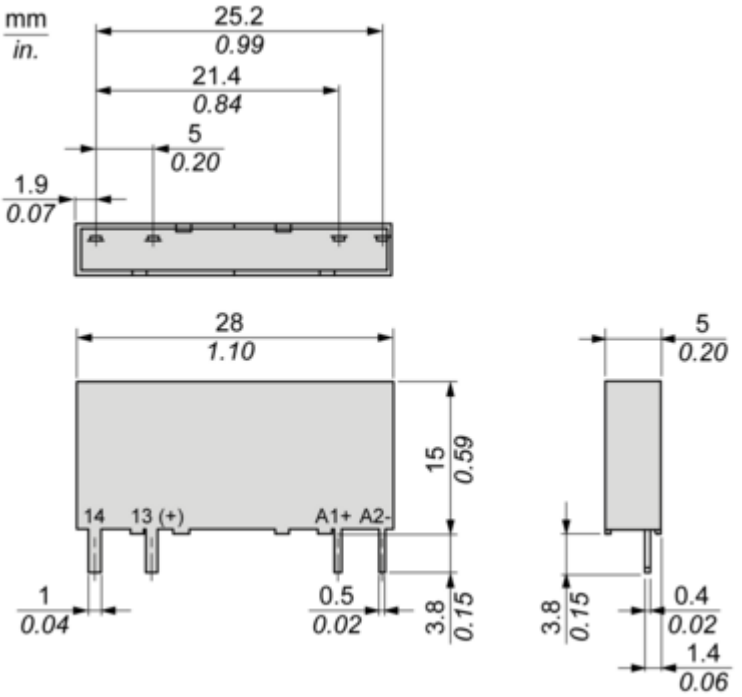

## Performance Curves

### Derating Curves

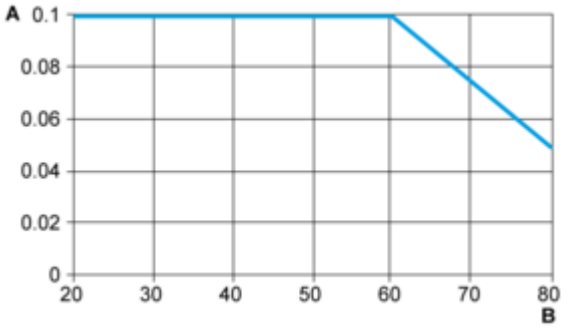


**A** : Load Current (Amperes)
**B** : Ambient Temperature (°C)