Product datasheet

Specifications

Green Premium™

solid state relay - panel mounting - input 3.5-32V DC, output 1-150 V DC, 40A

Local distributor code:

403015168 SSP1D440BD

EAN Code: 3606485441832

Main

Range Of Product	Harmony Solid State Relays
Product Or Component Type	Solid state relay up to 40 A
Device Short Name	SSP1
Mounting Support	Panel
Number Of Phases	1 phase
[In] Rated Current	40 A
Solid State Output Type	DC switching Mosfet output
Output Switching Mode	DC switching

Complementary

Minimum Switching Voltage	3.5 V DC turn-on
Maximum Switching Voltage	1 V DC turn-off
Response Time	0.1 ms (turn-on) 0.1 ms (turn-off)
Input Current	10…15 mA
Load Current	0.001…40 A
Surge Current	106 A for 10 ms
Co-Ordination Type	Type 2 - 20 A miniature circuit breaker (MCB) - curve B Type 1 - 40 A miniature circuit breaker (MCB) - curve B
Maximum Leakage Current	0.3 mA off-state
Maximum Voltage Drop	<2.1 V on-state
Insulation Resistance	1000 MOhm at 500 V DC
Maximum Capacitance	50 pF for input/output
Dielectric Strength	2.5 kV AC for input/output 2.5 kV AC for input or output to case
[Uimp] Rated Impulse Withstand Voltage	2.5 kV output to case
Tightening Torque	1.5...1.7 N.m for input 2...2.2 N.m for output
Connections - Terminals	Screw terminals: 0.2...3.3 mm², (AWG 24...AWG 12) with cable end for input Screw terminals: 0.5...5.26 mm², (AWG 20...AWG 10) with cable end for output Screw terminals: 0.2...3.3 mm², (AWG 24...AWG 12) without cable end for input Screw terminals: 0.5...8.26 mm², (AWG 20...AWG 8) without cable end for output Forked type tag connectors: 9.2 x 4 mm for input Ring lugs: 9.2 x 4 mm for input Forked type tag connectors: 11.7 x 4.5 mm for output Ring lugs: 11.7 x 4.5 mm for output

Disclaimer: This documentation is not intended as a substitute for and is not to be used for determining suitability or reliability of these products for specific user applications

Thermal Resistance	0.22 °C/W junction to case
Led Indicator	LED, green for input
Ip Degree Of Protection	IP20
Safety Reliability Data	MTTFd = 1875.9 years B10d = 1731395
Net Weight	89.2 g
Device Presentation	Complete product

Environment

Ambient Air Temperature For Operation	-40…80 °C
Ambient Air Temperature For Storage	-40…125 °C
Pollution Degree	2
Overvoltage Category	III
Product Certifications	CSA CE UL EAC
Marking	CE EAC CSA UL
Standards	CSA C22.2 No 14-13 IEC 60950-1 UL 508 IEC 62314

Packing Units

Unit Type Of Package 1	PCE
Number Of Units In Package 1	1
Package 1 Height	3.8 cm
Package 1 Width	4.8 cm
Package 1 Length	6.6 cm
Package 1 Weight	104 g
Unit Type Of Package 2	S01
Number Of Units In Package 2	30
Package 2 Height	15 cm
Package 2 Width	15 cm
Package 2 Length	40 cm
Package 2 Weight	3.415 kg

Contractual warranty

Warranty	18 months

Sustainability

Green Premium™ label is Schneider Electric's commitment to delivering products with best-in-class environmental performance. Green Premium promises compliance with the latest regulations, transparency on environmental impacts, as well as circular and low-CO_2 products.

Guide to assessing product sustainability is a white paper that clarifies global eco-label standards and how to interpret environmental declarations.

Learn more about Green Premium >

Guide to assess a product's sustainability >

Transparency RoHS/REACh

Well-being performance

Reach Free Of Svhc	
Toxic Heavy Metal Free	
Mercury Free	
Rohs Exemption Information	Yes

Certifications & Standards

Reach Regulation	REACh Declaration
Eu Rohs Directive	Pro-active compliance (Product out of EU RoHS legal scope) EU RoHS Declaration
China Rohs Regulation	China RoHS declaration
Environmental Disclosure	Product Environmental Profile
Circularity Profile	End of Life Information

Dimensions Drawings

Dimensions

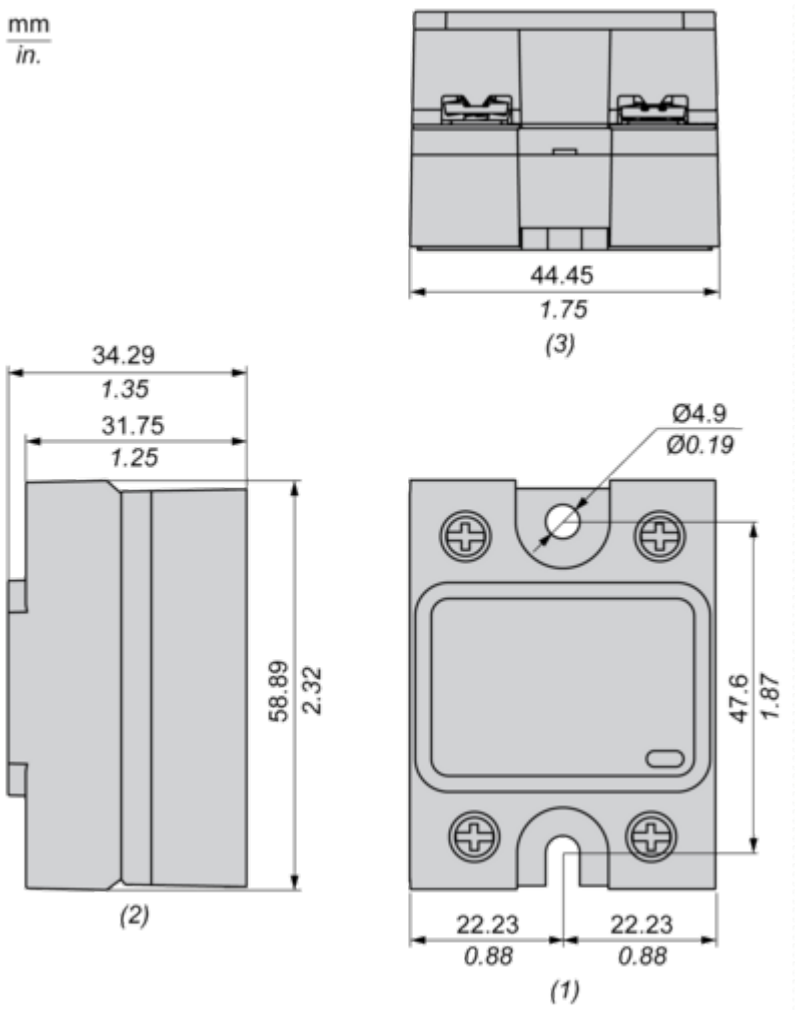

(1) Front view
(2) Side view
(3) Bottom view

Performance Curves

Derating Curves

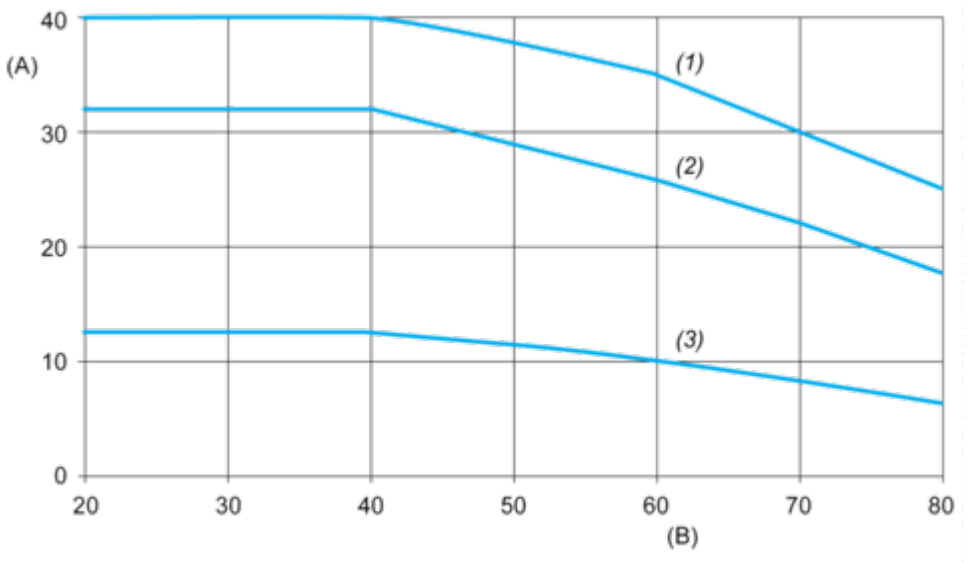

A : Load Current (Arms)
B : Ambient Temperature (°C)
(1) For Heatsink SSRHD10
(2) For Heatsink SSRHP17
(3) No Heatsink