# Product datasheet

Specifications

## green complete pilot light Ø22 plain lens with BA9s bulb 110...120V

Local distributor code:

23705913 XB4BV33

**EAN Code: 3389110887228**

## Main

| | |
|---|---|
| **Range Of Product** | Harmony XB4 |
| **Product Or Component Type** | Pilot light |
| **Device Short Name** | XB4 |
| **Bezel Material** | Chromium plated metal |
| **Fixing Collar Material** | Zamak |
| **Head Type** | Standard |
| **Mounting Diameter** | 22.5 mm |
| **Sale Per Indivisible Quantity** | 1 |
| **Shape Of Signaling Unit Head** | Round |
| **Cap/Operator Or Lens Colour** | Green |
| **Operator Additional Information** | With plain lens |
| **Light Source** | Incandescent |
| **Bulb Base** | BA 9s |
| **Light Block Supply** | Via integral transformer 1.2 VA 6 V |
| **[Us] Rated Supply Voltage** | 110...120 V AC at 50/60 Hz |

## Complementary

| | |
|---|---|
| **Height** | 47 mm |
| **Width** | 30 mm |
| **Depth** | 78 mm |
| **Terminals Description Iso N°1** | (X1-X2)PL |
| **Net Weight** | 0.152 kg |
| **Resistance To High Pressure Washer** | 7000000 Pa at 55 °C, distance : 0.1 m |
| **Connections - Terminals** | Screw clamp terminals, <= 2 x 1.5 mm² with cable end conforming to IEC 60947-1<br>Screw clamp terminals, 1 x 0.22...2 x 2.5 mm² without cable end conforming to IEC 60947-1 |
| **[Ui] Rated Insulation Voltage** | 600 V (pollution degree 3) conforming to IEC 60947-1 |
| **[Uimp] Rated Impulse Withstand Voltage** | 6 kV conforming to IEC 60947-1 |
| **Signalling Type** | Steady |
| **Device Presentation** | Complete product |

## Environment

Disclaimer: This documentation is not intended as a substitute for and is not to be used for determining suitability or reliability of these products for specific user applications

| | |
|---|---|
| **Protective Treatment** | TH |
| **Ambient Air Temperature For Storage** | -40…70 °C |
| **Ambient Air Temperature For Operation** | -40…55 °C |
| **Electrical Shock Protection Class** | Class I conforming to IEC 60536 |
| **Ip Degree Of Protection** | IP66 conforming to IEC 60529<br>IP67<br>IP69<br>IP69K |
| **Nema Degree Of Protection** | NEMA 13<br>NEMA 4X |
| **Ik Degree Of Protection** | IK06 conforming to IEC 50102 |
| **Standards** | JIS C8201-5-1<br>IEC 60947-5-1<br>UL 508<br>IEC 60947-5-4<br>IEC 60947-5-5<br>CSA C22.2 No 14<br>IEC 60947-1<br>JIS C8201-1 |
| **Product Certifications** | CSA<br>UL listed |
| **Vibration Resistance** | 5 gn (f= 12…500 Hz) conforming to IEC 60068-2-6 |
| **Shock Resistance** | 30 gn (duration = 18 ms) for half sine wave acceleration conforming to IEC 60068-2-27<br>50 gn (duration = 11 ms) for half sine wave acceleration conforming to IEC 60068-2-27 |

## Packing Units

| | |
|---|---|
| **Unit Type Of Package 1** | PCE |
| **Number Of Units In Package 1** | 1 |
| **Package 1 Height** | 3.2 cm |
| **Package 1 Width** | 8.6 cm |
| **Package 1 Length** | 5.0 cm |
| **Package 1 Weight** | 146.0 g |
| **Unit Type Of Package 2** | BB1 |
| **Number Of Units In Package 2** | 5 |
| **Package 2 Height** | 8.8 cm |
| **Package 2 Width** | 26.5 cm |
| **Package 2 Length** | 3.4 cm |
| **Package 2 Weight** | 730.0 g |
| **Unit Type Of Package 3** | S02 |
| **Number Of Units In Package 3** | 50 |
| **Package 3 Height** | 15.0 cm |
| **Package 3 Width** | 30.0 cm |
| **Package 3 Length** | 40.0 cm |
| **Package 3 Weight** | 7.64 kg |

## Contractual warranty

| | |
|---|---|
| **Warranty** | 18 months |

## Sustainability

**Green Premium™ label** is Schneider Electric's commitment to delivering products with best-in-class environmental performance. Green Premium promises compliance with the latest regulations, transparency on environmental impacts, as well as circular and low-$CO_2$ products.

**Guide to assessing product sustainability** is a white paper that clarifies global eco-label standards and how to interpret environmental declarations.

Learn more about Green Premium >

Guide to assess a product's sustainability >

Transparency RoHS/REACh

## Well-being performance

Mercury Free

| | |
|---|---|
| Rohs Exemption Information | Yes |

## Certifications & Standards

| | |
|---|---|
| **Reach Regulation** | REACh Declaration |
| **Eu Rohs Directive** | Pro-active compliance (Product out of EU RoHS legal scope) |
| **China Rohs Regulation** | China RoHS declaration |
| **Environmental Disclosure** | Product Environmental Profile |
| **Weee** | The product must be disposed on European Union markets following specific waste collection and never end up in rubbish bins |
| **Circularity Profile** | End of Life Information |

## Dimensions Drawings

### Dimensions

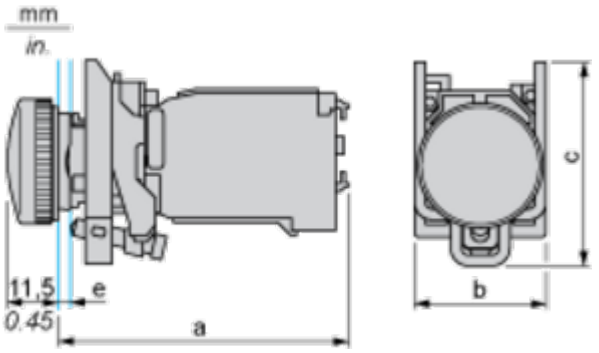


**e :** clamping thickness: 1 to 6 mm / 0.04 to 0.24 in.

| a in mm | a in in. | b in mm | b in in. | c in mm | c in in. |
|---|---|---|---|---|---|
| 66 | 2.60 | 30 | 1.18 | 46.5 | 1.83 |

## Mounting and Clearance

### Panel Cut-out for Pushbuttons, Switches and Pilot Lights (Finished Holes, Ready for Installation)

| Connection by Screw Clamp Terminals or Plug-in Connectors or on Printed Circuit Board | Connection by Faston Connectors |
|---|---|
| 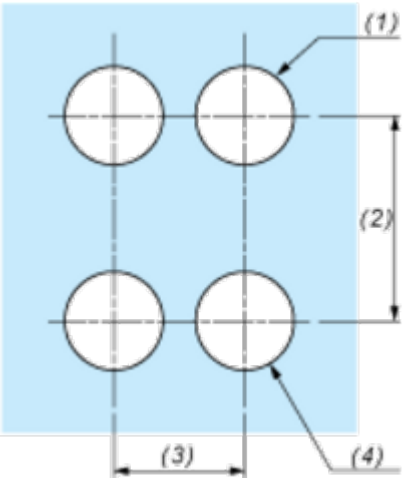  | 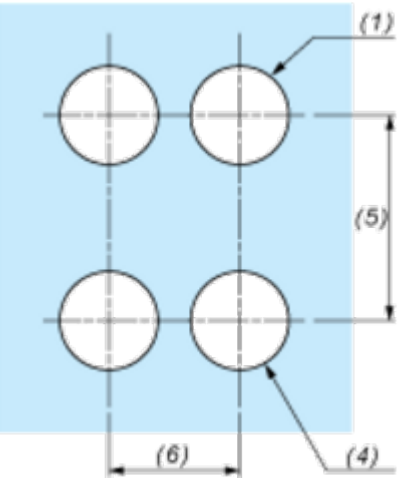  |

**(1)** Diameter on finished panel or support
**(2)** 40 mm min. / 1.57 in. min.
**(3)** 30 mm min. / 1.18 in. min.
**(4)** Ø 22.5 mm / 0.89 in. recommended (Ø 22.3 mm $_{0}^{+0.4}$ / 0.88 in. $_{0}^{+0.016}$)
**(5)** 45 mm min. / 1.78 in. min.
**(6)** 32 mm min. / 1.26 in. min.