Product datasheet

Specifications

Green Premium™

round pilot light Ø16 - IP65 - white - integral LED 12VDCpolarised - connector

XB6EAV1JP

Discontinued on: 29 Jan 2021

Discontinued

EAN Code: 3389110624656

Main

Range Of Product	Harmony XB6E
Product Or Component Type	Monolithic pilot light
Device Short Name	XB6E
Bezel Material	Plastic
Mounting Diameter	16 mm
Sale Per Indivisible Quantity	5
Shape Of Signaling Unit Head	Round
Cap/Operator Or Lens Colour	White
Light Source	Integral LED
Light Block Supply	Direct
[Us] Rated Supply Voltage	12 V DC polarised

Complementary

Net Weight	0.006 kg
Overvoltage Category	II conforming to IEC 60536
Operating Position	Any position
Marking	CE
Connections - Terminals	Insulated faston, connection size: 2.8 x 0.5 mm Solder terminal, clamping capacity: <= 0.75 mm² AWG 19 Fast connector socket
Tightening Torque	0.6…1 N.m
[Ui] Rated Insulation Voltage	250 V (pollution degree 3) conforming to IEC 60947-1
[Uimp] Rated Impulse Withstand Voltage	2.5 kV conforming to IEC 60947-1
Signalling Type	Steady
Current Consumption	10 mA
Service Life	30000 h

Environment

Ambient Air Temperature For Storage	-40…70 °C
Ambient Air Temperature For Operation	-10…55 °C
Ip Degree Of Protection	IP65 conforming to IEC 60529

Disclaimer: This documentation is not intended as a substitute for and is not to be used for determining suitability or reliability of these products for specific user applications

Standards	IEC 60947-1 UL 508 JIS C8201-5-1 CSA C22.2 No 14 JIS C 852 IEC 60947-5-1 JIS C8201-1
Product Certifications	cURus CCC
Vibration Resistance	1 mm (f= 10…55 Hz) conforming to IEC 60068-2-6
Shock Resistance	10 gn (duration = 11 ms) for half sine wave acceleration conforming to IEC 60068-2-27

Contractual warranty

Warranty	18 months

Sustainability

Green Premium™ label is Schneider Electric's commitment to delivering products with best-in-class environmental performance. Green Premium promises compliance with the latest regulations, transparency on environmental impacts, as well as circular and low-CO_2 products.

Guide to assessing product sustainability is a white paper that clarifies global eco-label standards and how to interpret environmental declarations.

Learn more about Green Premium >

Guide to assess a product's sustainability >

Transparency RoHS/REACh

Well-being performance

- Reach Free Of Svhc
- Mercury Free
- Rohs Exemption Information — Yes

Certifications & Standards

Reach Regulation	REACh Declaration
Eu Rohs Directive	Pro-active compliance (Product out of EU RoHS legal scope)
China Rohs Regulation	China RoHS declaration
Environmental Disclosure	Product Environmental Profile
Weee	The product must be disposed on European Union markets following specific waste collection and never end up in rubbish bins
Circularity Profile	End of Life Information

Dimensions Drawings

Pilot Light

Circular Head

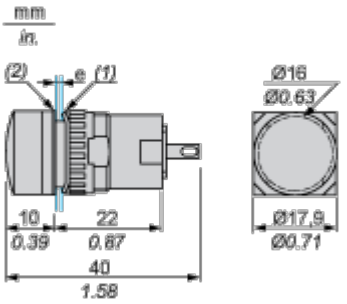

(1) Anti-rotation plate (thickness: 0.6 mm / 0.02 in.)

(2) Seal (thickness: 0.5 mm / 0.01 in.)

e panel thickness: 0.5 mm (0.01 in.) ≤ e ≤ 6 mm (0.24 in.)

Mounting and Clearance

Panel Cut-Out and Mounting
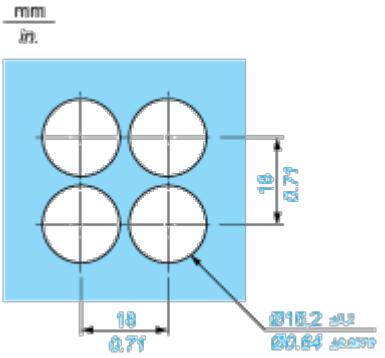
Circular or Square Head