Product datasheet

Specifications

Preventa module Cat.4 potential free NC/NC, NO/NC & PNP/PNP 48-240vac/dc screw

XPSUAF33AP

EAN Code: 3606489601638

Main

Range Of Product	Harmony Safety Automation
Product Or Component Type	Safety module
Safety Module Name	XPSUAF
Safety Module Application	Monitoring antivalent contacts For emergency stop, guard and light curtain monitoring
Function Of Module	Emergency stop button with 2 NC contacts Guard monitoring with 1 or 2 limit switches Monitoring 2 PNP sensors Magnetic switch monitoring Light curtain monitoring RFID switch Monitoring of electro-sensitive protection equipment (ESPE) Proximity sensor monitoring
Safety Level	Can reach PL e/category 4 conforming to ISO 13849-1 Can reach SILCL 3 conforming to IEC 62061 Can reach SIL 3 conforming to IEC 61508
Safety Reliability Data	MTTFd > 30 years conforming to ISO 13849-1 Dcavg >= 99 % conforming to ISO 13849-1 PFHd = 1.61E-09 conforming to ISO 13849-1 HFT = 1 conforming to IEC 62061 PFHd = 1.61E-09 conforming to IEC 62061 SFF > 99% conforming to IEC 62061 HFT = 1 conforming to IEC 61508-1 PFHd = 1.61E-09 conforming to IEC 61508-1 SFF > 99% conforming to IEC 61508-1 Type = B conforming to IEC 61508-1
Electrical Circuit Type	NC pair PNP pair Antivalent pair OSSD pair
Connections - Terminals	Removable screw terminal block, 0.2...2.5 mm² solid or flexible Removable screw terminal block, 0.25...2.5 mm² flexible with ferrule single conductor Removable screw terminal block, 0.2...1.5 mm² solid or flexible twin conductor Removable screw terminal block, 2 x 0.25...1 mm² flexible with ferrule without cable end, with bezel Removable screw terminal block, 2 x 0.5...1.5 mm² flexible with ferrule with cable end, with bezel
[Us] Rated Supply Voltage	48...240 V AC/DC - 10...10 %

Complementary

Synchronisation Time Between Inputs	0.5 s 2 s 4 s
Type Of Start	Automatic/manual/monitored
Power Consumption In W	3.0 W 48 V DC
Power Consumption In Va	6.5 VA 240 V AC 50/60 Hz

Disclaimer: This documentation is not intended as a substitute for and is not to be used for determining suitability or reliability of these products for specific user applications

Input Protection Type	Internal, electronic
Safety Outputs	3 NO
Safety Inputs	2 safety input 24 V DC 5 mA
Maximum Wire Resistance	500 Ohm
Input Compatibility	Normally closed circuit conforming to ISO 14119 XC limit switch conforming to ISO 14119 Mechanical contact conforming to ISO 14119 Normally closed circuit conforming to ISO 13850 Antivalent pair conforming to ISO 14119 OSSD pair conforming to IEC 61496-1-2 3-wire proximity sensors PNP
[Ie] Rated Operational Current	5 A AC-1 for normally open relay contact 3 A AC-15 for normally open relay contact 5 A DC-1 for normally open relay contact 3 A DC-13 for normally open relay contact
Control Outputs	3 on/off configurable pulsed output
Input/Output Type	Semiconductor pulsed diagnostic output 24 V DC, 20 mA Z1, not safety-related
[Ith] Conventional Free Air Thermal Current	8 A
Associated Fuse Rating	10 A gG for NO relay output circuit conforming to IEC 60947-1
Minimum Output Current	10 mA for relay output
Minimum Output Voltage	15 V for relay output
Maximum Response Time On Input Open	20 ms
[Ui] Rated Insulation Voltage	250 V (pollution degree 2) conforming to IEC 60947-1
[Uimp] Rated Impulse Withstand Voltage	4 kV overvoltage category II conforming to IEC 60947-1
Local Signalling	LED (green) for power ON LED (red) for error LED (yellow) for start LED (yellow) for safety status LED (yellow) for safety input S12 LED (yellow) for safety input S22
Mounting Support	35 mm symmetrical DIN rail
Depth	120 mm
Height	100 mm
Width	22.5 mm
Net Weight	0.200 kg

Environment

Standards	IEC 60947-5-1 IEC 61508-1 functional safety standard IEC 61508-2 functional safety standard IEC 61508-3 functional safety standard IEC 61508-4 functional safety standard IEC 61508-5 functional safety standard IEC 61508-6 functional safety standard IEC 61508-7 functional safety standard ISO 13849-1 functional safety standard IEC 62061 functional safety standard
Product Certifications	TÜV cULus
Ip Degree Of Protection	IP20 (terminals) conforming to IEC 60529 IP40 (housing) conforming to IEC 60529 IP54 (mounting area) conforming to IEC 60529
Ambient Air Temperature For Storage	-25…85 °C

Relative Humidity	5…95 % non-condensing

Packing Units

Unit Type Of Package 1	PCE
Number Of Units In Package 1	1
Package 1 Height	6.5 cm
Package 1 Width	13.7 cm
Package 1 Length	15.5 cm
Package 1 Weight	286.0 g
Unit Type Of Package 2	S03
Number Of Units In Package 2	16
Package 2 Height	30 cm
Package 2 Width	30 cm
Package 2 Length	40 cm
Package 2 Weight	5.293 kg

Contractual warranty

Warranty	18 months

Sustainability

Green Premium™ label is Schneider Electric's commitment to delivering products with best-in-class environmental performance. Green Premium promises compliance with the latest regulations, transparency on environmental impacts, as well as circular and low-CO_2 products.

Guide to assessing product sustainability is a white paper that clarifies global eco-label standards and how to interpret environmental declarations.

Learn more about Green Premium >

Guide to assess a product's sustainability >

Transparency RoHS/REACh

Well-being performance

Mercury Free	
Rohs Exemption Information	Yes
Pvc Free	

Certifications & Standards

Reach Regulation	REACh Declaration
Eu Rohs Directive	Pro-active compliance (Product out of EU RoHS legal scope)
China Rohs Regulation	China RoHS declaration
Environmental Disclosure	Product Environmental Profile
Weee	The product must be disposed on European Union markets following specific waste collection and never end up in rubbish bins
Circularity Profile	End of Life Information

Dimensions Drawings

Dimensions

Front and Side Views

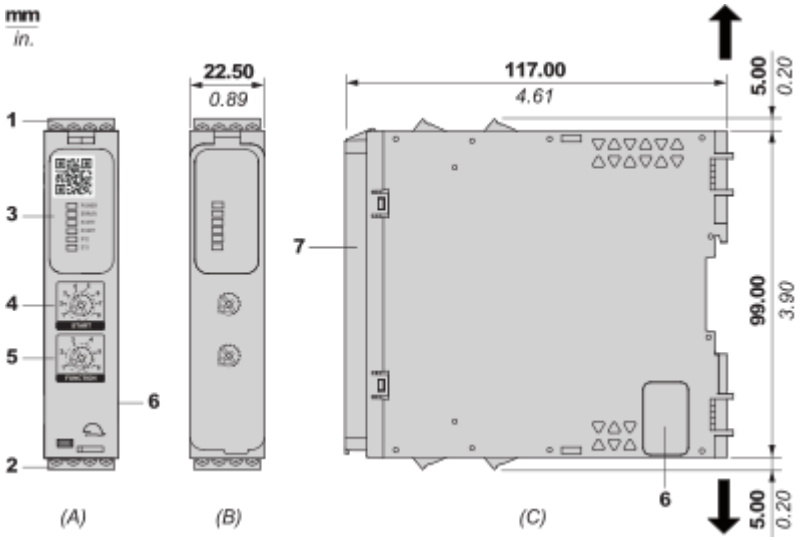

(A) : Product drawing
(B) : Screw clamp terminal
(C) : Side view
(1) : Removable terminal blocks, top
(2) : Removable terminal blocks, bottom
(3) : LED indicators
(4) : Start function selector
(5) : Function selector
(6) : Connector for optional output extension module (lateral)
(7) : Sealable transparent cover

mm / in. 7.0–8.0 / 0.28–0.31					
mm²	0,2... 2,5	0,25…2,5	0,2…1,5	0,25...1	0,5...1,5
AWG	24… 12	24…12	24…16	24…18	20…16
Ø 3,5 mm (0.14 in)				Nm	0.5... 0.6
				lb-in	4,4... 5,3

Mounting and Clearance

Mounting to DIN rail

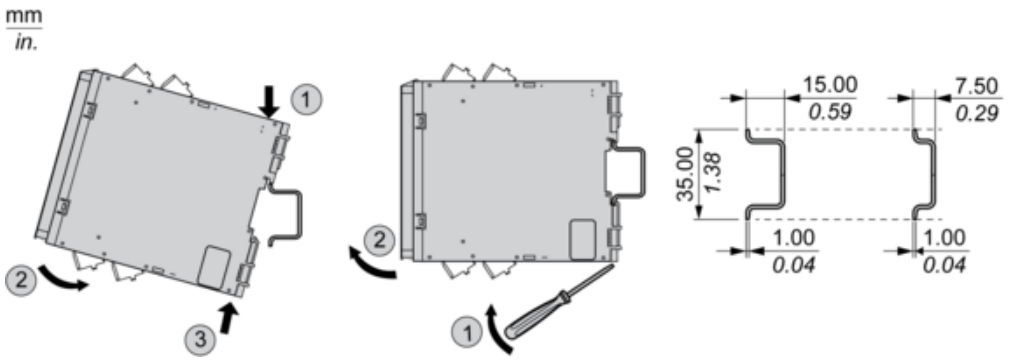

Screw-mounting

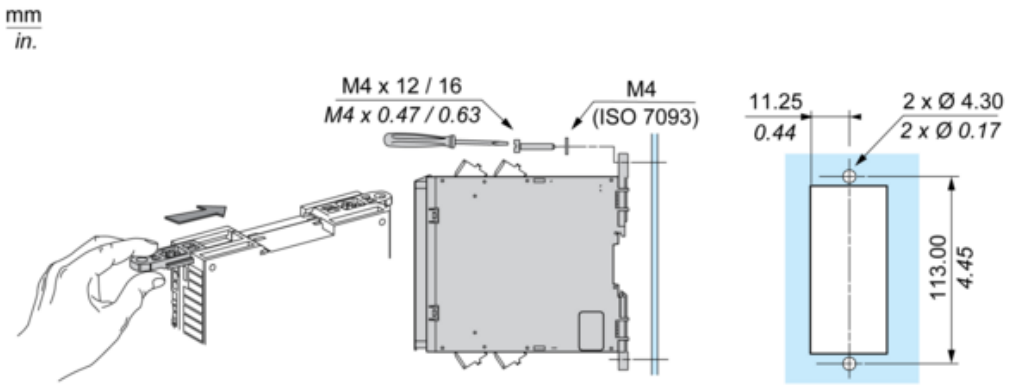

Connections and Schema

Wiring Drawing

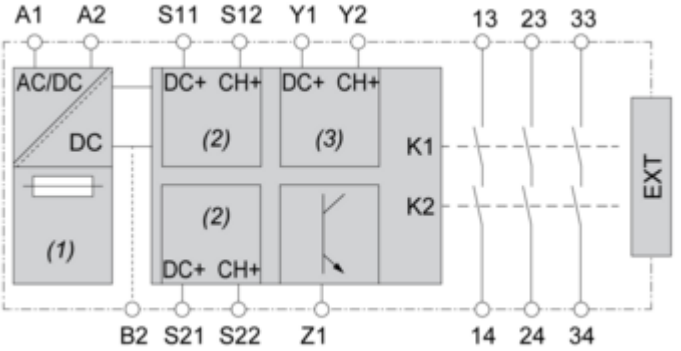

(1) : A1-A2 (Power supply)
(2) : S11-S12-S21-S22 (Single-channel safety input)
(3) : Y1-Y2 (Start)
13-23-33-14-24-34 : Output
EXT : Connector for optional extension module
B2 : Common ground terminal
Z1 : Pulsed output for diagnostics, not safety-related