# Product data sheet

Specifications

Green Premium™

## analog input module Modicon Quantum - 8 I thermocouple

140ATI03000

Discontinued on: Jan 15, 2023

To be end-of-service on: Dec 31, 2030

Discontinued - Service only

**Product availability: Non-Stock - Not normally stocked in distribution facility**

## Main

| | |
|---|---|
| **Range Of Product** | Modicon Quantum automation platform |
| **Product Or Component Type** | Analogue input module |
| **Type Of Filter** | Notch filter - 3 dB at 50/60 Hz<br>Single pole low pass - 3 dB at 20 Hz |

## Complementary

| | |
|---|---|
| **Analogue Input Number** | 8 |
| **Addressing Requirement** | 10 input words |
| **Analogue Input Type** | Thermocouple - 210...760 °C thermocouple J<br>Thermocouple - 270...1000 °C thermocouple E<br>Thermocouple - 270...1370 °C thermocouple K<br>Thermocouple - 270...400 °C thermocouple T<br>Thermocouple - 50...1665 °C thermocouple R<br>Thermocouple - 50...1665 °C thermocouple S |
| **Analogue Input Resolution** | 16 bits |
| **Absolute Accuracy Error** | +/- 2 °C plus + 0.1 % of reading thermocouple E<br>+/- 2 °C plus + 0.1 % of reading thermocouple J<br>+/- 2 °C plus + 0.1 % of reading thermocouple K<br>+/- 2 °C plus + 0.1 % of reading thermocouple T<br>+/- 4 °C plus + 0.1 % of reading thermocouple R<br>+/- 4 °C plus + 0.1 % of reading thermocouple S |
| **Linearity Error** | 1 °C, 0.1 °C, 1 F, 0.1 F - 210...760 °C<br>1 °C, 0.1 °C, 1 F, 0.1 F - 270...1000 °C<br>1 °C, 0.1 °C, 1 F, 0.1 F - 270...1370 °C<br>1 °C, 0.1 °C, 1 F, 0.1 F - 270...400 °C<br>1 °C, 0.1 °C, 1 F, 0.1 F - 50...1665 °C |
| **Accuracy Drift According To Temperature** | 0.15 µV/°C + 0.0015 % of reading/°C max low level voltage |
| **Common Mode Rejection** | > - 120 dB 50/60 Hz |
| **Isolation Between Channels And Bus** | 1780 V AC 60 s<br>2500 V DC 60 s |
| **Isolation Between Channels** | 300 V DC<br>220 V AC |
| **Update Time** | 1000 ms |
| **Fault Type** | Broken wire<br>Overtacking scale |
| **Marking** | CE |
| **Cold Junction Compensation** | Internal 32…140 °F (0…60 °C) |

Price is “List Price” and may be subject to a trade discount – check with your local distributor or retailer for actual price.

Disclaimer: This documentation is not intended as a substitute for and is not to be used for determining suitability or reliability of these products for specific user applications

| | |
|---|---|
| **Local Signalling** | for bus communication is present (Active) 1 LED (green)<br>for external fault 1 LED (red)<br>for channel is turned on 8 LEDs (green)<br>for channel fault 8 LEDs (red) |
| **Bus Current Requirement** | 280 mA |
| **Power Dissipation In W** | 1.5 W |
| **Module Format** | Standard |
| **Net Weight** | 0.66 lb(US) (0.3 kg) |

## Environment

| | |
|---|---|
| **Standards** | CSA C22.2 No 142<br>UL 508 |
| **Product Certifications** | cUL<br>FM Class 1 Division 2 |
| **Resistance To Electrostatic Discharge** | 4 kV contact IEC 801-2<br>8 kV on air IEC 801-2 |
| **Resistance To Electromagnetic Fields** | 9.14 V/m (10 V/m) 80…1000 MHz IEC 801-3 |
| **Ambient Air Temperature For Operation** | 32…140 °F (0…60 °C) |
| **Ambient Air Temperature For Storage** | -40…185 °F (-40…85 °C) |
| **Relative Humidity** | 95 % without condensation |
| **Operating Altitude** | <= 16404.2 ft (5000 m) |

## Ordering and shipping details

| | |
|---|---|
| **Category** | US1PC2118155 |
| **Discount Schedule** | PC21 |
| **Gtin** | 3595861126602 |
| **Returnability** | No |
| **Country Of Origin** | FR |

## Packing Units

| | |
|---|---|
| **Unit Type Of Package 1** | PCE |
| **Number Of Units In Package 1** | 1 |
| **Package 1 Height** | 1.97 in (5.000 cm) |
| **Package 1 Width** | 6.50 in (16.500 cm) |
| **Package 1 Length** | 12.40 in (31.500 cm) |
| **Package 1 Weight** | 14.99 oz (425.000 g) |
| **Unit Type Of Package 2** | S03 |
| **Number Of Units In Package 2** | 7 |
| **Package 2 Height** | 11.81 in (30.000 cm) |
| **Package 2 Width** | 11.81 in (30.000 cm) |
| **Package 2 Length** | 15.75 in (40.000 cm) |
| **Package 2 Weight** | 7.62 lb(US) (3.456 kg) |

## Contractual warranty

| | |
|---|---|
| **Warranty** | 18 months |

## Sustainability

**Green Premium™ label** is Schneider Electric's commitment to delivering products with best-in-class environmental performance. Green Premium promises compliance with the latest regulations, transparency on environmental impacts, as well as circular and low-$CO_2$ products.

**Guide to assessing product sustainability** is a white paper that clarifies global eco-label standards and how to interpret environmental declarations.

Learn more about Green Premium >

Guide to assess a product's sustainability >

RoHS/REACh

## Well-being performance

| | |
|---|---|
| Reach Free Of Svhc | |
| Mercury Free | |
| Rohs Exemption Information | Yes |

## Certifications & Standards

| | |
|---|---|
| **Eu Rohs Directive** | Pro-active compliance (Product out of EU RoHS legal scope)<br>EU RoHS Declaration |
| **China Rohs Regulation** | China RoHS declaration |
| **Weee** | The product must be disposed on European Union markets following specific waste collection and never end up in rubbish bins. |
| **Circularity Profile** | End of Life Information |
| **California Proposition 65** | WARNING: This product can expose you to chemicals including: Lead and lead compounds, which is known to the State of California to cause cancer and birth defects or other reproductive harm. For more information go to www.P65Warnings.ca.gov |

## Dimensions Drawings

### Racks for Modules Mounting

#### Dimensions of Modules and Racks

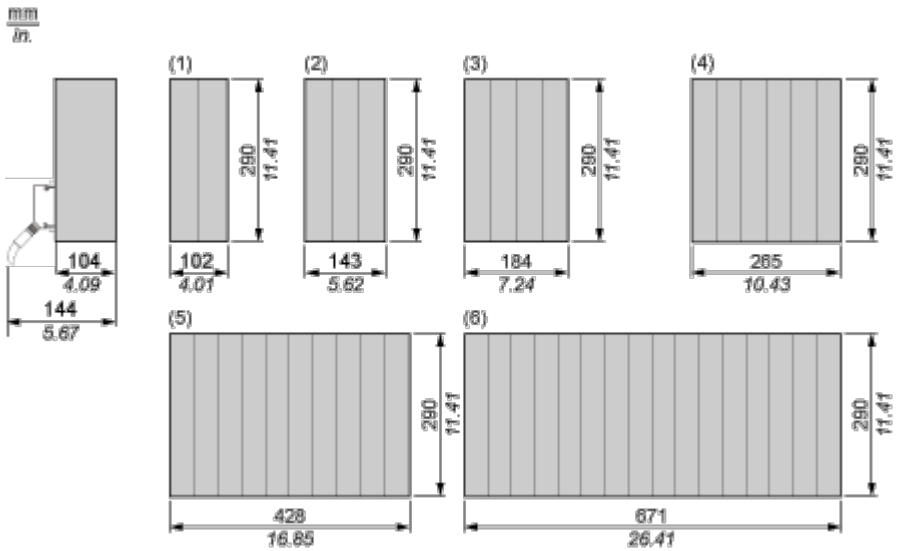


(1) 2 slots

(2) 3 slots

(3) 4 slots

(4) 6 slots

(5) 10 slots

(6) 16 slots

## Connections and Schema

### Thermocouple Input 8-Channel Module

### Wiring Diagram

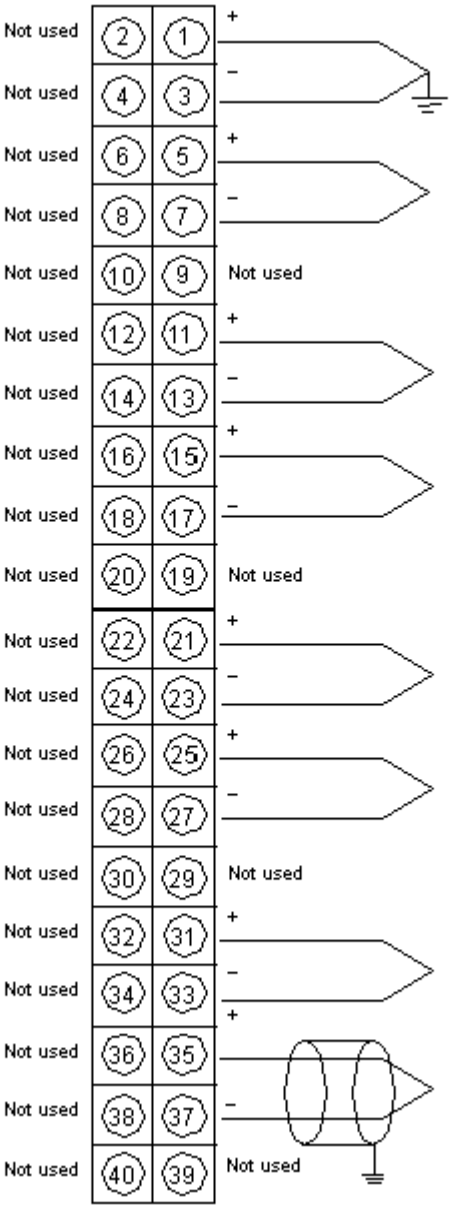


### Using Cold Junction Compensation (CJC)

For temperature measurements, the module provides an internal CJC. However, a remote CJC can be used with the following TC types: J,K and T. The TC must be connected to Channel.

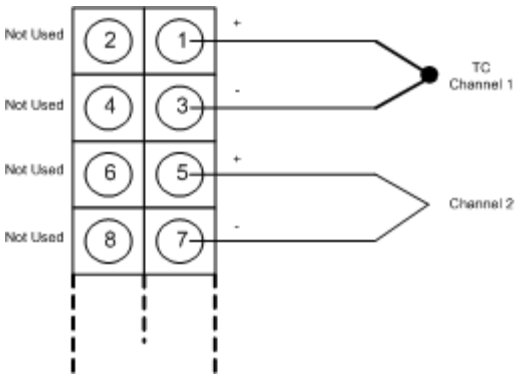
Not Used
2
1
+
TC
Channel 1
Not Used
4
3
-
Not Used
6
5
+
Channel 2
Not Used
8
7
-