Product data sheet

Specifications

Green Premium™

discrete output module Modicon Quantum - 32 O

140DDO15310

Discontinued on: Dec 31, 2022

To be end-of-service on: Dec 31, 2030

Discontinued - Service only

Product availability: Non-Stock - Not normally stocked in distribution facility

Main

Range Of Product	Modicon Quantum automation platform
Product Or Component Type	TTL discrete output module
Discrete Output Number	32

Complementary

Group Of Channels	4 groups of 8 channels
Discrete Output Type	Positive (sink) TTL
Addressing Requirement	2 output words
Discrete Output Voltage	5 V DC
Voltage State 1 Guaranteed	<= 0.2 V
[Us] Rated Supply Voltage	4...5.5 V DC
Absolute Maximum Output	15 V 0.0013 s decaying voltage pulse DC
Internal Pullup Resistor	440 Ohm
Maximum Load Current	<= 2.4 A per module <= 600 mA each group <= 75 mA each point
Surge Current	750 A 0.5 ms between each point
Response Time	<= 250 µs at state 0 to state 1 resistive <= 250 µs at state 1 to state 0 resistive
Protection Type	Output protection by transient voltage suppression Internal by fuse
Fault Indication	Loss of field power Blown fuse
Power Dissipation	4 W
Maximum Supply Current	0.4 A
Isolation Between Group	500 Vrms for 1 minute
Marking	CE
Local Signalling	for bus communication is present (Active) 1 LED (green) for external fault detected (F) 1 LED (red) for input status 32 LEDs (green)
Bus Current Requirement	350 mA
Current Consumption	2800 mA 5 V DC

Price is “List Price” and may be subject to a trade discount – check with your local distributor or retailer for actual price.

Disclaimer: This documentation is not intended as a substitute for and is not to be used for determining suitability or reliability of these products for specific user applications

Module Format	Standard
Net Weight	0.99 lb(US) (0.45 kg)

Environment

Product Certifications	RMRS GOST C-tick FM Class 1 Division 2
Standards	UL 508 CSA C22.2 No 142
Resistance To Electrostatic Discharge	4 kV contact IEC 801-2 8 kV on air IEC 801-2
Resistance To Electromagnetic Fields	9.14 V/m (10 V/m) 80…2000 MHz IEC 801-3
Ambient Air Temperature For Operation	32…140 °F (0…60 °C)
Ambient Air Temperature For Storage	-40…185 °F (-40…85 °C)
Relative Humidity	95 % without condensation
Operating Altitude	<= 16404.2 ft (5000 m)

Ordering and shipping details

Category	US1PC2118155
Discount Schedule	PC21
Gtin	3595861133020
Returnability	No
Country Of Origin	FR

Packing Units

Unit Type Of Package 1	PCE
Number Of Units In Package 1	1
Package 1 Height	6.42 in (16.3 cm)
Package 1 Width	1.77 in (4.5 cm)
Package 1 Length	12.28 in (31.2 cm)
Package 1 Weight	15.56 oz (441.0 g)
Unit Type Of Package 2	S02
Number Of Units In Package 2	2
Package 2 Height	5.91 in (15.0 cm)
Package 2 Width	11.81 in (30.0 cm)
Package 2 Length	15.75 in (40.0 cm)
Package 2 Weight	30.55 oz (866.0 g)

Contractual warranty

Warranty	18 months

Sustainability

Green Premium™ label is Schneider Electric's commitment to delivering products with best-in-class environmental performance. Green Premium promises compliance with the latest regulations, transparency on environmental impacts, as well as circular and low-CO_2 products.

Guide to assessing product sustainability is a white paper that clarifies global eco-label standards and how to interpret environmental declarations.

Learn more about Green Premium >

Guide to assess a product's sustainability >

RoHS/REACh

Well-being performance

Reach Free Of Svhc	
Mercury Free	
Rohs Exemption Information	Yes

Certifications & Standards

Eu Rohs Directive	Pro-active compliance (Product out of EU RoHS legal scope) EU RoHS Declaration
China Rohs Regulation	China RoHS declaration
Weee	The product must be disposed on European Union markets following specific waste collection and never end up in rubbish bins.
Circularity Profile	End of Life Information
California Proposition 65	WARNING: This product can expose you to chemicals including: Lead and lead compounds, which is known to the State of California to cause cancer and birth defects or other reproductive harm. For more information go to www.P65Warnings.ca.gov

Dimensions Drawings

Racks for Modules Mounting

Dimensions of Modules and Racks

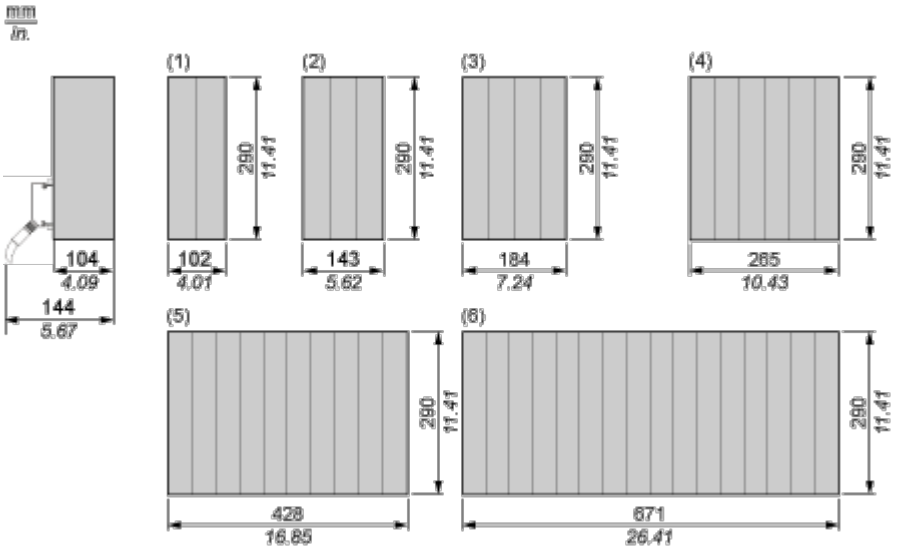

(1) 2 slots

(2) 3 slots

(3) 4 slots

(4) 6 slots

(5) 10 slots

(6) 16 slots

Connections and Schema

5 Vdc Discrete Output Sink Module
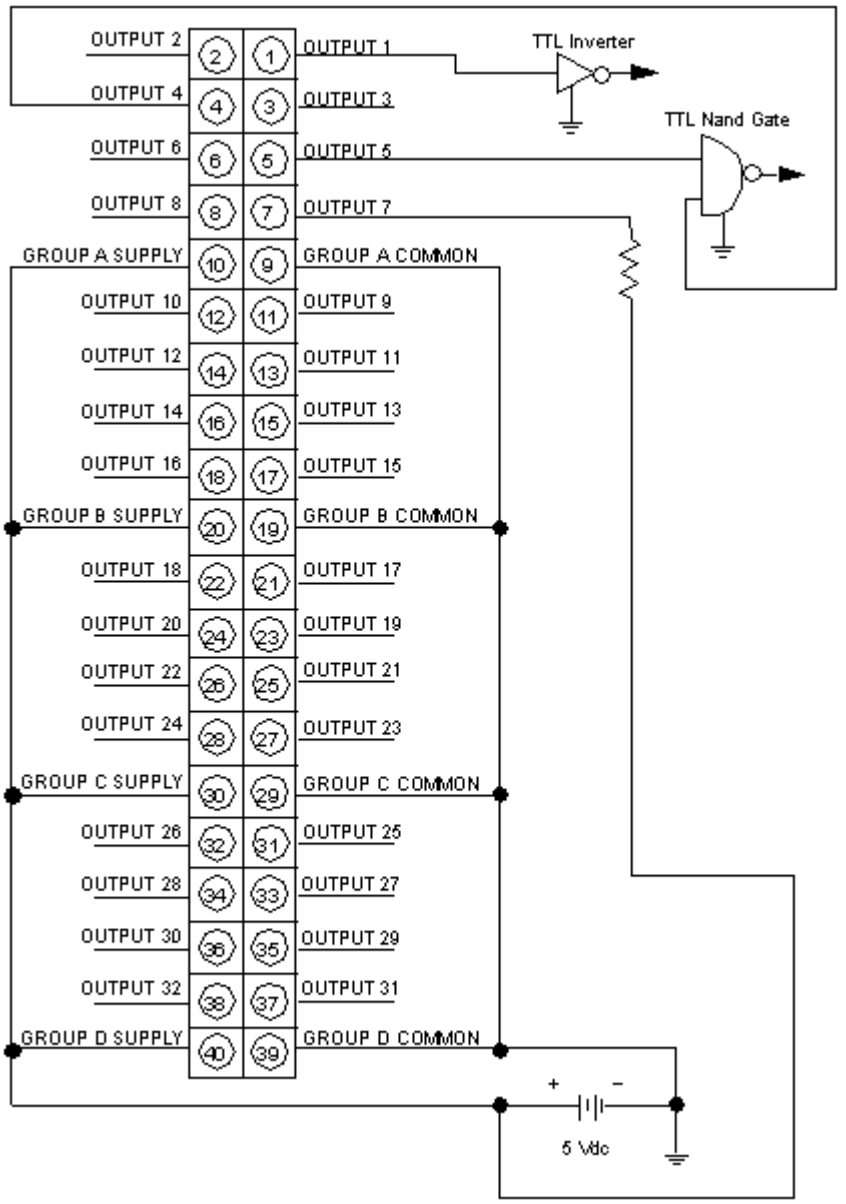
Wiring Diagram