Product data sheet

Specifications

Green Premium™

Modicon Quantum relay discrete output module - 8 O - 0.5 word

140DRC83000C

Discontinued on: Mar 15, 2022

Discontinued

Product availability: Non-Stock - Not normally stocked in distribution facility

Main

Range Of Product	Modicon Quantum automation platform
Product Or Component Type	Relay discrete output module
Discrete Output Number	8

Complementary

Contacts Type And Composition	1 NO/NC
Contact Form	Form C
Discrete Output Voltage	20...250 V AC 30...150 V DC 5...30 V DC
Addressing Requirement	0.5 output word
Maximum Load Current	100 mA 30...50 V DC L/R = 10 ms 2 A 250/30 V AC/DC tungsten 1/4 hp cos phi = 0.4 3 A 250/30 V AC/DC 300 mA 30...50 V DC resistive 5 A 250/30 V AC/DC resistive 140 °F (60 °C)
Surge Current	20 A 10 ms capacitive
Switching Frequency	30 Hz resistive F = 0.5/I²L inductive
Switching Capacity In Va	1250 VA resistive
Maximum Response Time On Input Open	10 ms at state 0 to state 1 20 ms at state 1 to state 0
Mechanical Durability	10000000 cycles
Electrical Durability	100000 cycles 100 mA 30...150 V DC L/R = 10 ms 100000 cycles 30...150 V DC interposing relay 100000 cycles 300 mA 30...150 V DC resistive 100000 cycles 5 A 30 V DC resistive 200000 cycles 5 A 250 V AC resistive 50000 cycles 500 mA 30...150 V DC resistive
Output Overvoltage Protection	Internal by varistor, 275 V
Isolation Between Channels	1780 Vrms AC for 1 minute 2500 V DC
Isolation Between Channels And Bus	1780 Vrms AC for 1 minute 2500 V DC for 1 minute
Power Dissipation	2.75 W + (0.5 x the number of points on)
Marking	CE

Price is “List Price” and may be subject to a trade discount – check with your local distributor or retailer for actual price.

Disclaimer: This documentation is not intended as a substitute for and is not to be used for determining suitability or reliability of these products for specific user applications

Local Signalling	for bus communication is present (Active) 1 LED (green) for external fault detected (F) 1 LED (red) for input status 8 LEDs (green)
Bus Current Requirement	560 mA
Module Format	Standard
Net Weight	0.66 lb(US) (0.3 kg)

Environment

Protective Treatment	Conformal coating Humiseal 1A33
Product Certifications	RINA FM Class 1 Division 2 GOST C-tick DNV GL RMRS ABS
Standards	UL 508 CSA C22.2 No 142
Resistance To Electrostatic Discharge	4 kV contact IEC 801-2 8 kV on air IEC 801-2
Resistance To Electromagnetic Fields	9.14 V/m (10 V/m) 80…2000 MHz IEC 801-3
Ambient Air Temperature For Operation	32…140 °F (0…60 °C)
Ambient Air Temperature For Storage	-40…185 °F (-40…85 °C)
Relative Humidity	95 % without condensation
Operating Altitude	<= 16404.2 ft (5000 m)

Ordering and shipping details

Category	US1PC2118155
Discount Schedule	PC21
Gtin	3595861136168
Returnability	No
Country Of Origin	US

Packing Units

Unit Type Of Package 1	PCE
Number Of Units In Package 1	1
Package 1 Height	6.42 in (16.3 cm)
Package 1 Width	1.77 in (4.5 cm)
Package 1 Length	12.28 in (31.2 cm)
Package 1 Weight	17.57 oz (498 g)
Unit Type Of Package 2	S02
Number Of Units In Package 2	2
Package 2 Height	5.91 in (15 cm)
Package 2 Width	11.81 in (30 cm)
Package 2 Length	15.75 in (40 cm)

Package 2 Weight	33.93 oz (962 g)
Unit Type Of Package 3	P12
Number Of Units In Package 3	64
Package 3 Height	31.50 in (80 cm)
Package 3 Width	31.50 in (80 cm)
Package 3 Length	47.24 in (120 cm)
Package 3 Weight	67.87 lb(US) (30.784 kg)

Contractual warranty

Warranty	18 months

Sustainability

Green Premium™ label is Schneider Electric's commitment to delivering products with best-in-class environmental performance. Green Premium promises compliance with the latest regulations, transparency on environmental impacts, as well as circular and low-CO_2 products.

Guide to assessing product sustainability is a white paper that clarifies global eco-label standards and how to interpret environmental declarations.

Learn more about Green Premium >

Guide to assess a product's sustainability >

RoHS/REACh

Well-being performance

Reach Free Of Svhc	
Mercury Free	
Rohs Exemption Information	Yes

Certifications & Standards

Eu Rohs Directive	Pro-active compliance (Product out of EU RoHS legal scope) EU RoHS Declaration
China Rohs Regulation	China RoHS declaration
Weee	The product must be disposed on European Union markets following specific waste collection and never end up in rubbish bins.
Circularity Profile	End of Life Information
California Proposition 65	WARNING: This product can expose you to chemicals including: Lead and lead compounds, which is known to the State of California to cause cancer and birth defects or other reproductive harm. For more information go to www.P65Warnings.ca.gov

Dimensions Drawings

Racks for Modules Mounting

Dimensions of Modules and Racks

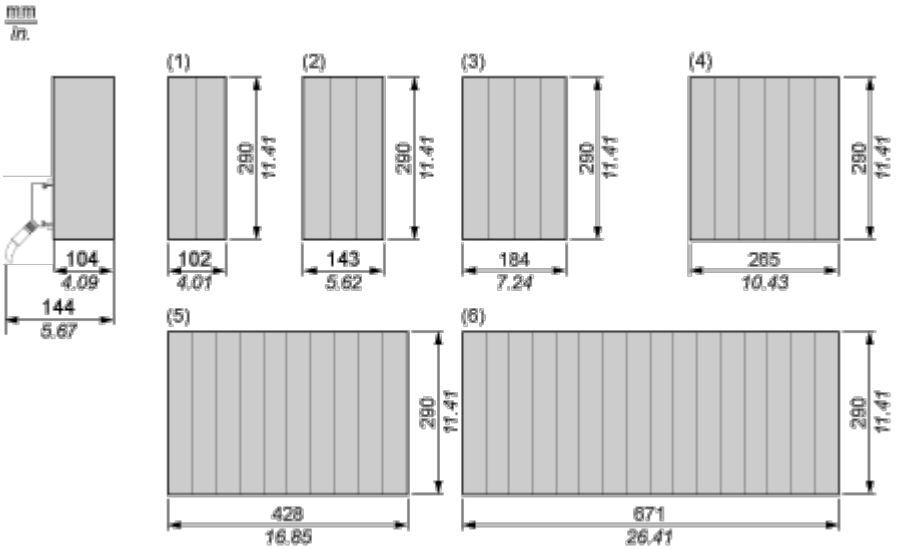

(1) 2 slots

(2) 3 slots

(3) 4 slots

(4) 6 slots

(5) 10 slots

(6) 16 slots

Connections and Schema

Relay Output Normally Open/Normally Closed Module

Wiring Diagram

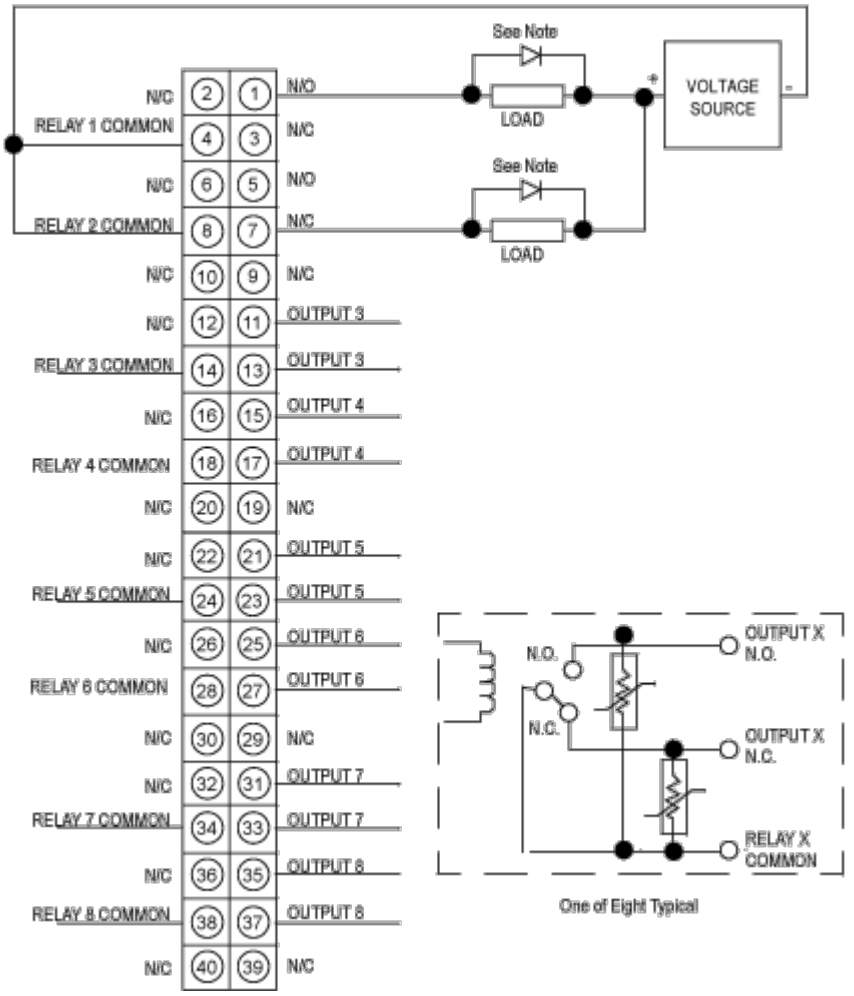

N/C Not Connected

N.O. Normally Open

N.C. Normally Closed