Product data sheet

Specifications

discrete I/O module Modicon Momentum - 16I / 8O solid state

170ADM37010

Product availability: Stock - Normally stocked in distribution facility

Main

Range Of Product	Modicon Momentum automation platform
Product Or Component Type	Discrete solid state I/O base DC
Group Of Channels	4 groups of 4 inputs 2 groups of 4 outputs
Discrete Input Number	16 IEC 1131-2 Type 1
Discrete Input Logic	Positive
Discrete Input Voltage	24 V DC
Discrete Output Number	8
Discrete Output Type	Solid state switch
Discrete Output Voltage	<= 30 V DC 24 V DC
Discrete Output Logic	Positive
Protective Treatment	TC

Complementary

[Us] Rated Supply Voltage	24 V DC
Input Voltage Limits	- 3...30 V
Voltage State 0 Guaranteed	-3...5 V
Voltage State 1 Guaranteed	11...30 V
Current State 0 Guaranteed	<= 1.2 mA
Current State 1 Guaranteed	>= 2.5 mA
Input Resistance	4 kOhm
Discrete Output Current	16 A per module 2 A per point 8 A per group
Maximum Leakage Current	1 mA 24 V output circuit)
Peak Output Current	2.8 A
Fault Type	Short circuit on output Overload on output
Response Time	< 0.1 ms from state 0 to state 1 on output < 0.1 ms from state 1 to state 0 on output 2.2 ms from state 0 to state 1 on input 3.3 ms from state 1 to state 0 on input
Isolation Between Channels And Bus	500 V AC

Price is “List Price” and may be subject to a trade discount – check with your local distributor or retailer for actual price.

Disclaimer: This documentation is not intended as a substitute for and is not to be used for determining suitability or reliability of these products for specific user applications

Power Dissipation	6.5 W <= 10 W
Marking	CE
Terminals Description Plc N°1	(11)IN_DIS#11 (M-)PW_NEG (L+)PW_POS (7)IN_DIS#7 (15)IN_DIS#15 (16)IN_DIS#16 (1)IN_DIS#1 (4)IN_DIS#4 (6)IN_DIS#6 (14)IN_DIS#14 (13)IN_DIS#13 (5)IN_DIS#5 TB (12)IN_DIS#12 (10)IN_DIS#10 (8)IN_DIS#8 (2)IN_DIS#2 (3)IN_DIS#3 (9)IN_DIS#9
Terminals Description Plc N°2	(5)OUT_DIS#5 (1)OUT_DIS#1 (2)OUT_DIS#2 (4)OUT_DIS#4 (6)OUT_DIS#6 (8)OUT_DIS#8 (7)OUT_DIS#7 (3)OUT_DIS#3 (1L+)PW_POS (2L+)PW_POS TB_1
Current Consumption	250 mA 24 V DC
Depth	1.87 in (47.5 mm)
Height	5.57 in (141.5 mm)
Width	4.92 in (125 mm)
Net Weight	0.49 lb(US) (0.22 kg)

Environment

Product Certifications	UL CSA
Resistance To Electrostatic Discharge	4 kV contact IEC 801-2 8 kV on air IEC 801-2
Resistance To Electromagnetic Fields	9.14 V/m (10 V/m) 80...1000 MHz IEC 801-3
Ambient Air Temperature For Operation	32…140 °F (0…60 °C)
Ambient Air Temperature For Storage	-40…185 °F (-40…85 °C)
Relative Humidity	95 % without condensation
Operating Altitude	<= 16404.2 ft (5000 m)

Ordering and shipping details

Category	US1PC3118206
Discount Schedule	PC31
Gtin	3595861147638
Returnability	No
Country Of Origin	US

Packing Units

Unit Type Of Package 1	PCE
Number Of Units In Package 1	1
Package 1 Height	2.17 in (5.5 cm)
Package 1 Width	7.09 in (18.0 cm)
Package 1 Length	10.24 in (26.0 cm)
Package 1 Weight	13.90 oz (394.0 g)
Unit Type Of Package 2	S03
Number Of Units In Package 2	10
Package 2 Height	11.81 in (30 cm)
Package 2 Width	11.81 in (30 cm)
Package 2 Length	15.75 in (40 cm)
Package 2 Weight	9.66 lb(US) (4.381 kg)
Unit Type Of Package 3	P06
Number Of Units In Package 3	80
Package 3 Height	41.34 in (105.0 cm)
Package 3 Width	23.62 in (60.0 cm)
Package 3 Length	31.50 in (80.0 cm)
Package 3 Weight	88.23 lb(US) (40.02 kg)

Contractual warranty

Warranty	18 months

Sustainability

Green Premium™ label is Schneider Electric's commitment to delivering products with best-in-class environmental performance. Green Premium promises compliance with the latest regulations, transparency on environmental impacts, as well as circular and low-CO_2 products.

Guide to assessing product sustainability is a white paper that clarifies global eco-label standards and how to interpret environmental declarations.

Learn more about Green Premium >

Guide to assess a product's sustainability >

Transparency RoHS/REACh

Well-being performance

Mercury Free

Rohs Exemption Information	Yes

Certifications & Standards

Reach Regulation	REACh Declaration
Eu Rohs Directive	Pro-active compliance (Product out of EU RoHS legal scope)
China Rohs Regulation	China RoHS declaration
Environmental Disclosure	Product Environmental Profile
Weee	The product must be disposed on European Union markets following specific waste collection and never end up in rubbish bins.
Circularity Profile	End of Life Information
California Proposition 65	WARNING: This product can expose you to chemicals including: Lead and lead compounds, which is known to the State of California to cause cancer and birth defects or other reproductive harm. For more information go to www.P65Warnings.ca.gov

Dimensions Drawings

Standard Adapter on a Typical Base

Dimensions

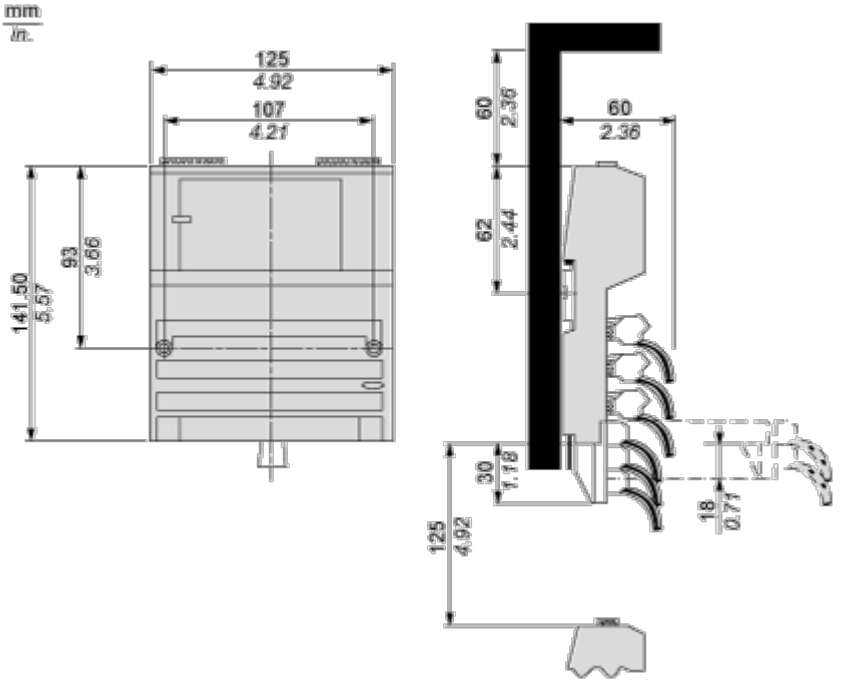

Mounting and Clearance

Mounting on a Wall

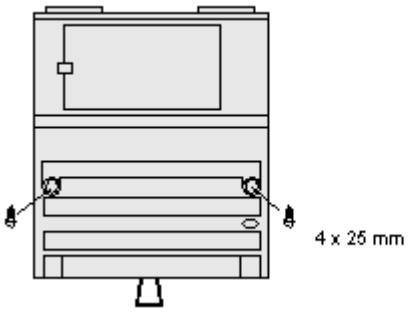

Connections and Schema

External Wiring Diagrams

2-Wire Devices

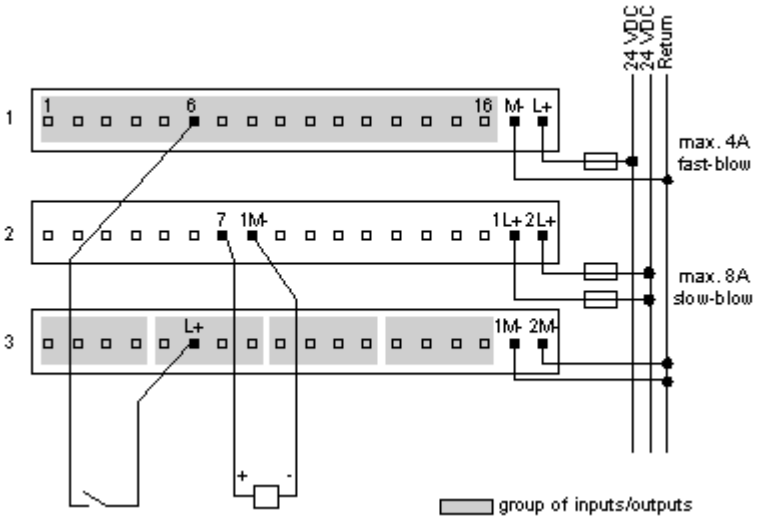

Sensor Activated by Output

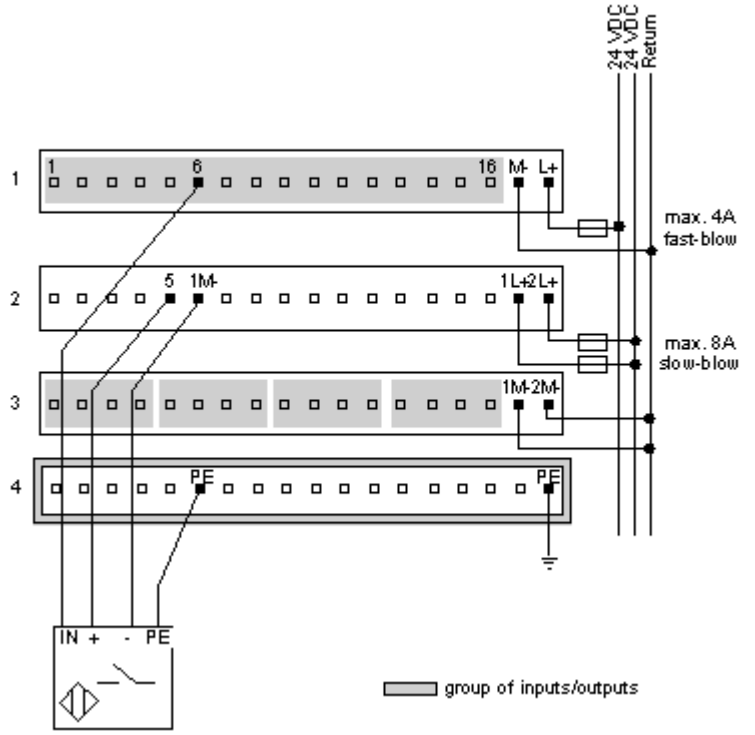

Four-Wire Sensor with a Two-Wire Actuator

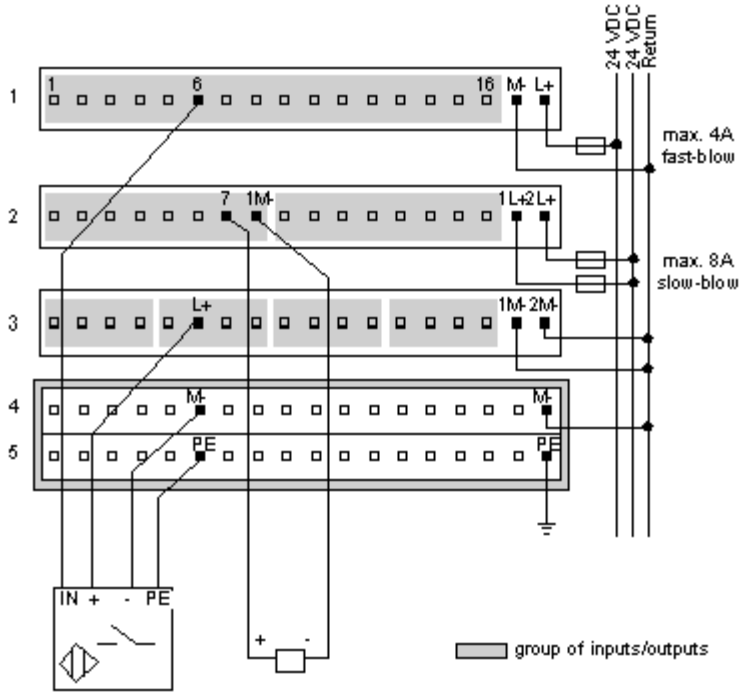

Broken Wire Detection

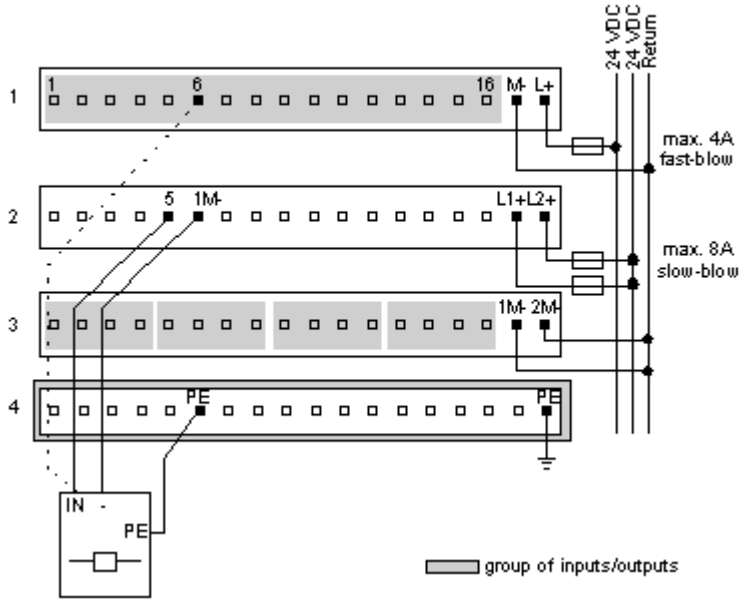

Internal Pin Connections
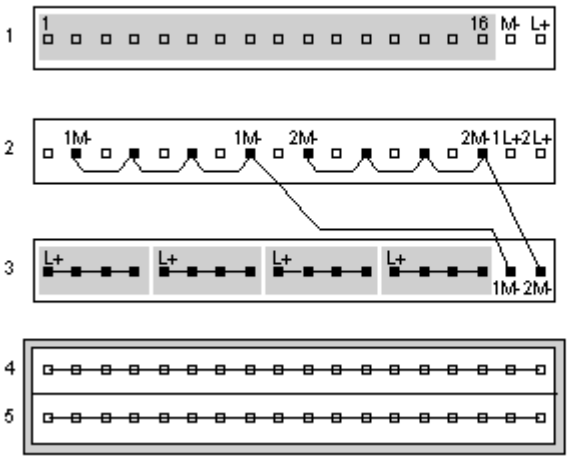
Rows 1 through 3 show the internal connections between terminals on the I/O base. Rows 4 through 5 show the internal connections on the optional busbar.