Product data sheet

Specifications

PUSH BUTTON LEGEND PLATE 30MM T-K

9001KN110WP

Discontinued on: Dec 2, 2020

End-of-service on: Dec 31, 2020

Discontinued

Main

Range Of Product	Harmony 9001 SK Harmony 9001 K
Accessory / Separate Part Type	Legend plate
Accessory / Separate Part Category	Marking accessory
Accessory / Separate Part Destination	Control and signalling units Ø 30 mm
Marking	Black down white
Language	English
Label Dimensions	57 x 57 mm

Complementary

Mounting Diameter	1.18 in (30 mm)
Material	Plastic
Net Weight	0.01 lb(US) (0.005 kg)

Ordering and shipping details

Category	21433-9001 ACCESS FOR K,KX,SK
Discount Schedule	CS1
Gtin	3389119001038
Returnability	No
Country Of Origin	MX

Contractual warranty

Warranty	18 months

Price is “List Price” and may be subject to a trade discount – check with your local distributor or retailer for actual price.

Disclaimer: This documentation is not intended as a substitute for and is not to be used for determining suitability or reliability of these products for specific user applications

Sustainability

Green Premium™ label is Schneider Electric's commitment to delivering products with best-in-class environmental performance. Green Premium promises compliance with the latest regulations, transparency on environmental impacts, as well as circular and low-CO_2 products.

Guide to assessing product sustainability is a white paper that clarifies global eco-label standards and how to interpret environmental declarations.

Learn more about Green Premium >

Guide to assess a product's sustainability >

Transparency RoHS/REACh

Well-being performance

Mercury Free

Rohs Exemption Information Yes

Certifications & Standards

Reach Regulation	REACh Declaration
Eu Rohs Directive	Pro-active compliance (Product out of EU RoHS legal scope)
China Rohs Regulation	China RoHS declaration
Environmental Disclosure	Product Environmental Profile
Circularity Profile	No need of specific recycling operations
California Proposition 65	WARNING: This product can expose you to chemicals including: Nickel compounds, which is known to the State of California to cause cancer, and Di-isodecyl phthalate (DIDP), which is known to the State of California to cause birth defects or other reproductive harm. For more information go to www.P65Warnings.ca.gov

Dimensions Drawings
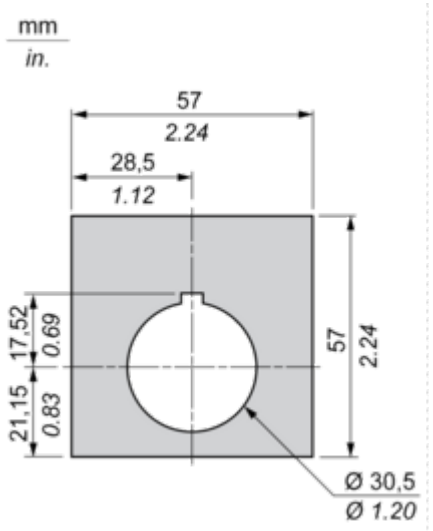
Dimensions