Product data sheet

Specifications

Push button, Harmony 9001K, metal, mushroom 57mm, black, 30mm, spring return, 1 CO

9001KR25BH13

Product availability: Non-Stock - Not normally stocked in distribution facility

Price*: 138.00 USD

Main

Range Of Product	Harmony 9001K
Product Or Component Type	Push-button
Device Short Name	9001K
Type Of Operator	spring return
Operator Profile	Black mushroom Ø 57 mm, unmarked

Complementary

Bezel Material	Metal
Mounting Diameter	1.18 in (30 mm)
Cad Overall Width	2.24 in (57 mm)
Cad Overall Height	2.24 in (57 mm)
Cad Overall Depth	2.76 in (70 mm)
Terminals Description Iso N°1	(13-14-11-12)OF
Net Weight	0.29 lb(US) (0.132 kg)
Operating Position	Any position
Shape Of Signaling Unit Head	Round
Head Material	Plastic
Operator Additional Information	Screw-on plastic with set screw
Contacts Type And Composition	1 C/O
Positive Opening	Without
Mechanical Durability	5000000 cycles
Connections - Terminals	Screw clamp terminals, 1 x 0.22...2 x 1.5 mm² IEC 60947-1
Tightening Torque	7.08 lbf.in (0.8 N.m) IEC 60947-1
Shape Of Screw Head	Cross slotted
Contacts Material	Silver alloy contacts
Short-Circuit Protection	10 A cartridge fuse IEC 60947-5-1
[Ith] Conventional Free Air Thermal Current	10 A
[Ui] Rated Insulation Voltage	250 V 3)IEC 60947-1
[Uimp] Rated Impulse Withstand Voltage	2.5 kV IEC 60947-1

Price is “List Price” and may be subject to a trade discount – check with your local distributor or retailer for actual price.

Disclaimer: This documentation is not intended as a substitute for and is not to be used for determining suitability or reliability of these products for specific user applications

[Ie] Rated Operational Current	3 A 240 V, AC-15, A600-Q600 NEMA 0.55 A 125 V, DC-13, A600-Q600 NEMA
[Icm] Rated Short-Circuit Making Capacity	12 kA 600 V AC-15, 7200 VA 15 kA 480 V AC-15, 7200 VA 30 kA 240 V AC-15, 7200 VA 60 kA 120 V AC-15, 7200 VA 0.1 kA 600 V DC-13, 7200 VA 0.27 kA 250 V DC-13 0.55 kA 125 V DC-13
Rated Breaking Capacity	3 kA 240 V AC-15, 720 VA 6 kA 120 V AC-15, 720 VA 1.2 kA 600 V AC-15, 720 VA 1.5 kA 480 V AC-15, 720 VA 0.1 kA 600 V DC-13 0.27 kA 250 V DC-13 0.55 kA 125 V DC-13
Device Presentation	Complete product
Cap/Operator Or Lens Colour	Black
Operator Profile	Mushroom Ø 57 mm
Type Of Operator	Spring return
Size	30 mm

Environment

Protective Treatment	TC
Ambient Air Temperature For Storage	-40…158 °F (-40…70 °C)
Ambient Air Temperature For Operation	-13…158 °F (-25…70 °C)
Overvoltage Category	Class II IEC 61140
Ip Degree Of Protection	IP66 IEC 60529
Nema Degree Of Protection	NEMA 1 NEMA 12 NEMA 13 NEMA 2 NEMA 3 NEMA 3R NEMA 4 NEMA 6
Standards	IEC 60947-5-1 IEC 60947-1 IEC 60947-5-4 JIS C 4520 JIS C 852 UL 508 CSA C22.2 No 14
Product Certifications	NEMA UL 508
Vibration Resistance	7 gn 2…500 Hz)IEC 60068-2-6
Shock Resistance	50 gn IEC 60068-2-27

Ordering and shipping details

Category	US10CS121426
Discount Schedule	0CS1
Gtin	785901033530
Returnability	No
Country Of Origin	MX

Packing Units

Unit Type Of Package 1	PCE
Number Of Units In Package 1	1
Package 1 Height	1.80 in (4.572 cm)
Package 1 Width	2.10 in (5.334 cm)
Package 1 Length	3.60 in (9.144 cm)
Package 1 Weight	5.92 oz (167.829 g)
Unit Type Of Package 2	S01
Number Of Units In Package 2	14
Package 2 Height	5.91 in (15.0 cm)
Package 2 Width	5.91 in (15.0 cm)
Package 2 Length	15.75 in (40.0 cm)
Package 2 Weight	5.62 lb(US) (2.549 kg)

Contractual warranty

Warranty	18 months

Sustainability

Green Premium™ label is Schneider Electric's commitment to delivering products with best-in-class environmental performance. Green Premium promises compliance with the latest regulations, transparency on environmental impacts, as well as circular and low-CO_2 products.

Guide to assessing product sustainability is a white paper that clarifies global eco-label standards and how to interpret environmental declarations.

Learn more about Green Premium >

Guide to assess a product's sustainability >

Transparency RoHS/REACh

Well-being performance

Mercury Free

Rohs Exemption Information	Yes

Certifications & Standards

Reach Regulation	REACh Declaration
Eu Rohs Directive	Pro-active compliance (Product out of EU RoHS legal scope)
China Rohs Regulation	China RoHS declaration
Environmental Disclosure	Product Environmental Profile
Weee	The product must be disposed on European Union markets following specific waste collection and never end up in rubbish bins.
Circularity Profile	No need of specific recycling operations
California Proposition 65	WARNING: This product can expose you to chemicals including: Lead and lead compounds, which is known to the State of California to cause cancer and birth defects or other reproductive harm. For more information go to www.P65Warnings.ca.gov

Dimensions Drawings

Dimensions

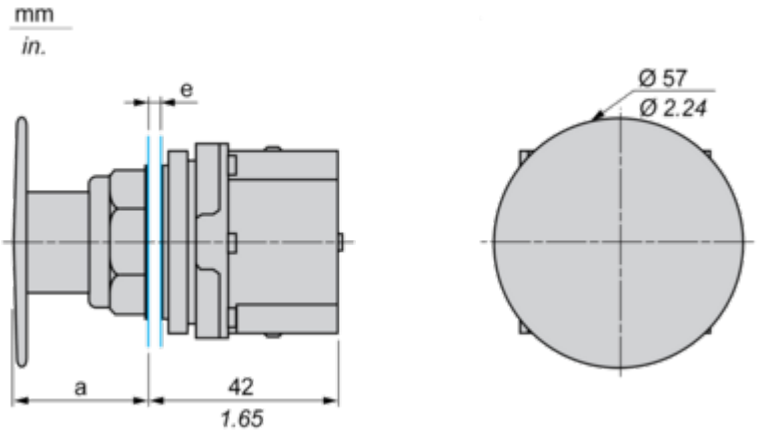

e panel thickness: 1 to 6 mm / 0.04 to 0.24 in.
a 28 mm / 1.10 in.

Mounting and Clearance

Contact Block Mounting Position

Top and Rear views

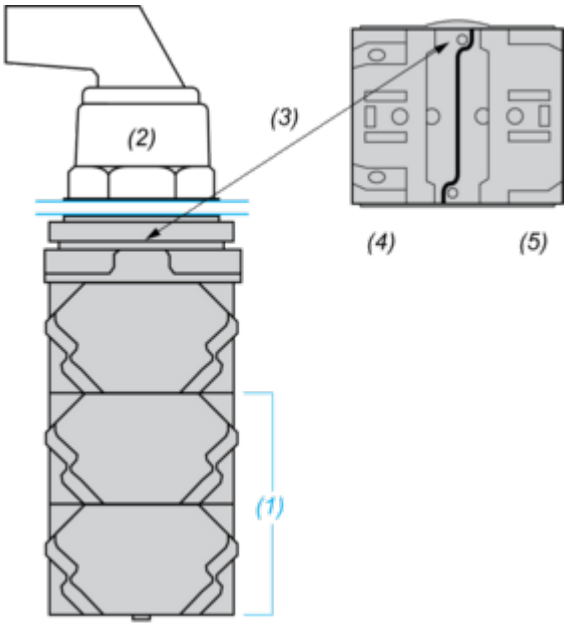

(1) It is possible to mount up to 3 levels of contacts blocks (maximum of 6 contacts blocks)
(2) Operator
(3) Locating notch
(4) Side 1
(5) Side 2

Panel Cut-Out

Clearance

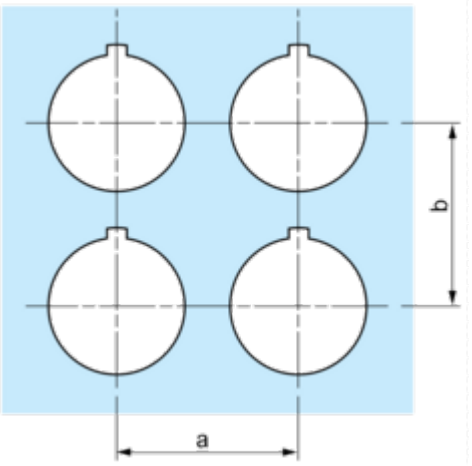

Legend plate	a min.		b min.	
	mm	in.	mm	in.
9001KN2••	57.2	2.25	57.2	2.25
9001KN3••	57.2	2.25	57.2	2.25

Individual Cut-outs Details
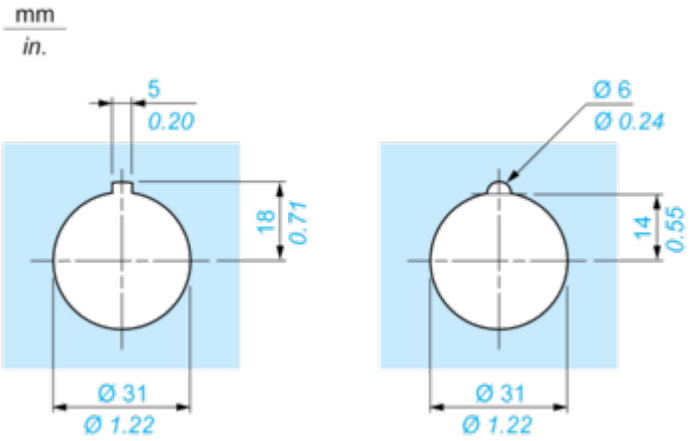
2 alternatives