# Product data sheet

Specifications

## Selector switch head, Harmony 9001K, metal, long handle, black, 30mm, 3 positions, stay put

9001KS46FB

**Product availability: Stock - Normally stocked in distribution facility**

**Price*: 53.00 USD**

## Main

| | |
|---|---|
| **Range Of Product** | Harmony 9001K |
| **Product Or Component Type** | Head for selector switch |
| **Device Short Name** | 9001K |
| **Type Of Operator** | stay put |
| **Operator Profile** | Black long handle |

## Complementary

| | |
|---|---|
| **Bezel Material** | Metal |
| **Mounting Diameter** | 1.18 in (30 mm) |
| **Net Weight** | 0.38 lb(US) (0.172 kg) |
| **Shape Of Signaling Unit Head** | Octagonal |
| **Operator Position Information** | 3 positions |
| **Contacts Type And Composition** | Without contact block |
| **Mechanical Durability** | 500000 cycles |
| **Product Compatibility** | 9001KA1 side 1 or 2 |
| **Device Presentation** | Basic element |
| **Cap/Operator Or Lens Colour** | Black |
| **Operator Profile** | Long handle |
| **Type Of Operator** | Stay put |
| **Size** | 30 mm |
| **Cam Profile** | 6 |

## Environment

| | |
|---|---|
| **Protective Treatment** | TC |
| **Ambient Air Temperature For Storage** | -40…158 °F (-40…70 °C) |
| **Ambient Air Temperature For Operation** | -13…158 °F (-25…70 °C) |
| **Overvoltage Category** | Class II IEC 61140 |
| **Ip Degree Of Protection** | IP66 IEC 60529 |

Price is “List Price” and may be subject to a trade discount – check with your local distributor or retailer for actual price.

Disclaimer: This documentation is not intended as a substitute for and is not to be used for determining suitability or reliability of these products for specific user applications

| | |
|---|---|
| **Nema Degree Of Protection** | NEMA 1<br>NEMA 12<br>NEMA 13<br>NEMA 2<br>NEMA 3<br>NEMA 3R<br>NEMA 4 |
| **Standards** | JIS C 4520<br>CSA C22.2 No 14<br>JIS C 852<br>EN/IEC 60947-5-4<br>UL 508<br>EN/IEC 60947-1<br>EN/IEC 60947-5-1 |
| **Product Certifications** | NEMA<br>UL 508 |
| **Vibration Resistance** | 7 gn 2…500 Hz)IEC 60068-2-6 |
| **Shock Resistance** | 50 gn IEC 60068-2-27 |

## Ordering and shipping details

| | |
|---|---|
| **Category** | US10CS121426 |
| **Discount Schedule** | 0CS1 |
| **Gtin** | 785901035138 |
| **Returnability** | Yes |
| **Country Of Origin** | MX |

## Packing Units

| | |
|---|---|
| **Unit Type Of Package 1** | PCE |
| **Number Of Units In Package 1** | 1 |
| **Package 1 Height** | 2.10 in (5.334 cm) |
| **Package 1 Width** | 2.30 in (5.842 cm) |
| **Package 1 Length** | 3.00 in (7.62 cm) |
| **Package 1 Weight** | 4.48 oz (127.006 g) |

## Contractual warranty

| | |
|---|---|
| **Warranty** | 18 months |

## Sustainability

**Green Premium™ label** is Schneider Electric's commitment to delivering products with best-in-class environmental performance. Green Premium promises compliance with the latest regulations, transparency on environmental impacts, as well as circular and low-$CO_2$ products.

**Guide to assessing product sustainability** is a white paper that clarifies global eco-label standards and how to interpret environmental declarations.

Learn more about Green Premium >

Guide to assess a product's sustainability >

Transparency RoHS/REACh

## Well-being performance

Mercury Free

| | |
|---|---|
| Rohs Exemption Information | Yes |

## Certifications & Standards

| | |
|---|---|
| **Reach Regulation** | REACh Declaration |
| **Eu Rohs Directive** | Pro-active compliance (Product out of EU RoHS legal scope) |
| **China Rohs Regulation** | China RoHS declaration |
| **Environmental Disclosure** | Product Environmental Profile |
| **Weee** | The product must be disposed on European Union markets following specific waste collection and never end up in rubbish bins. |
| **Circularity Profile** | No need of specific recycling operations |
| **California Proposition 65** | WARNING: This product can expose you to chemicals including: Nickel compounds, which is known to the State of California to cause cancer, and Di-isodecyl phthalate (DIDP), which is known to the State of California to cause birth defects or other reproductive harm. For more information go to www.P65Warnings.ca.gov |

## Dimensions Drawings

### Dimensions

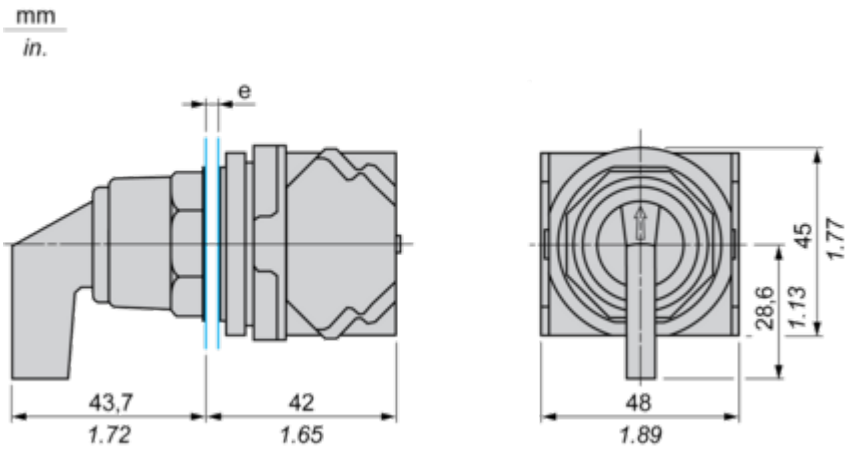


**e** panel thickness: 1 to 6 mm / 0.04 to 0.24 in.

## Mounting and Clearance

### Contact Block Mounting Position

Top and Rear views

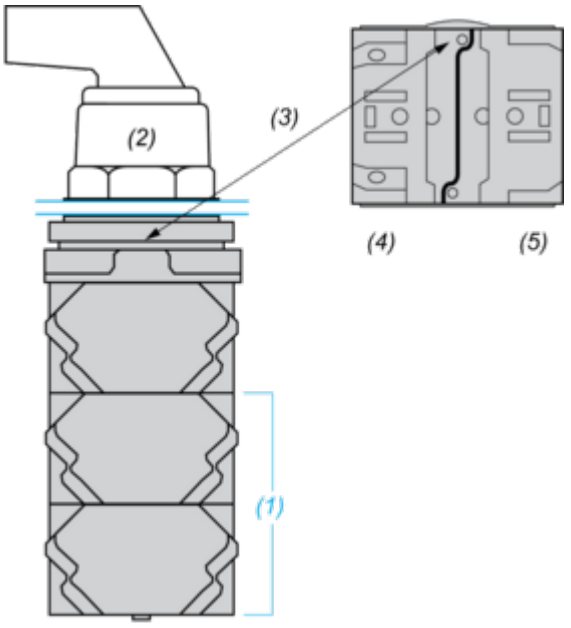


**(1)** It is possible to mount up to 3 levels of contacts blocks (maximum of 6 contacts blocks)
**(2)** Operator
**(3)** Locating notch
**(4)** Side 1
**(5)** Side 2

## Panel Cut-Out

### Clearance

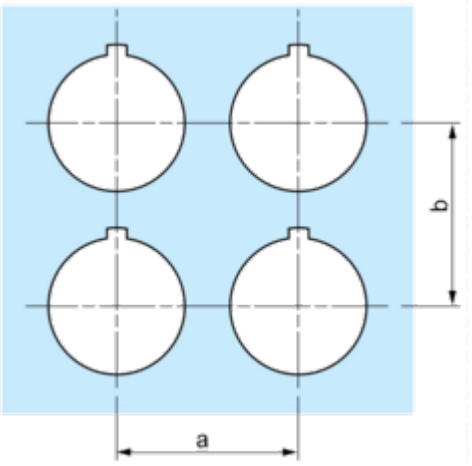


| Legend plate | a min. | | b min. | |
|---|---|---|---|---|
| | mm | in. | mm | in. |
| 9001KN2•• | 57.2 | 2.25 | 44.5 | 1.75 |
| 9001KN3•• | 57.2 | 2.25 | 50.8 | 2.00 |

### Individual Cut-outs Details
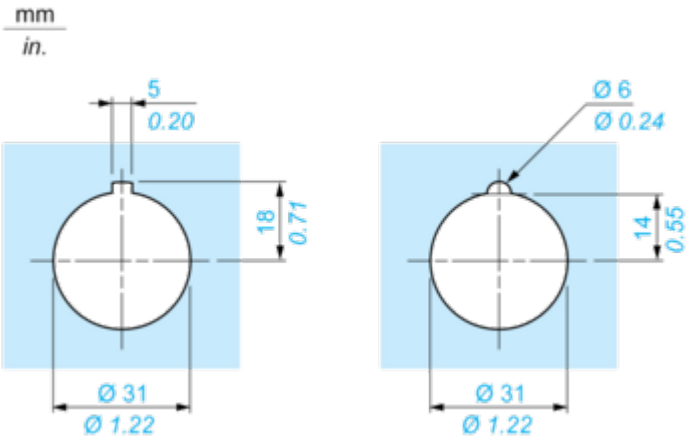
2 alternatives