Product data sheet

Specifications

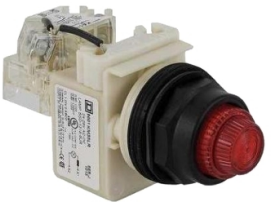

Push-to-test pilot light, Harmony 9001K, metal, polycarbonate, fresnel, red, 30mm, LED red, 24-28V

9001KT35LRR31

Product availability: Stock - Normally stocked in distribution facility

Price*: 197.00 USD

Main

Range Of Product	Harmony 9001K
Product Or Component Type	Push-to-test pilot light
Device Short Name	9001K
Type Of Operator	spring return
Operator Profile	Red projecting, unmarked

Complementary

Bezel Material	Metal
Mounting Diameter	1.18 in (30 mm)
Shape Of Signaling Unit Head	Octagonal
Light Source	LED
Light Source	LED
Bulb Base	BA 9s
Light Block Supply	Direct
[Us] Rated Supply Voltage	24 V AC/DC
[Us] Rated Supply Voltage	24...28 V AC/DC
Contacts Type And Composition	1 C/O
Connections - Terminals	Screw clamp terminals 1 x 0.22...2 x 1.5 mm² IEC 60947-1
Tightening Torque	7.08 lbf.in (0.8 N.m) IEC 60947-1
Shape Of Screw Head	Cross slotted
Mechanical Durability	5000000 cycles
Operating Position	Any position
[Ui] Rated Insulation Voltage	250 V 3)IEC 60947-1
[Uimp] Rated Impulse Withstand Voltage	2.5 kV IEC 60947-1
Contacts Material	Silver alloy contacts
Contact Operation	Standard
Positive Opening	Without
Short-Circuit Protection	10 A cartridge fuse IEC 60947-5-1

Price is “List Price” and may be subject to a trade discount – check with your local distributor or retailer for actual price.

Disclaimer: This documentation is not intended as a substitute for and is not to be used for determining suitability or reliability of these products for specific user applications

[Ith] Conventional Free Air Thermal Current	10 A
[Icm] Rated Short-Circuit Making Capacity	0.1 kA 600 V DC-13, 7200 VA 0.27 kA 250 V DC-13, 7200 VA 0.55 kA 125 V DC-13, 7200 VA 12 kA 600 V AC-15, 7200 VA 15 kA 480 V AC-15, 7200 VA 30 kA 240 V AC-15, 7200 VA 60 kA 120 V AC-15, 7200 VA
Rated Breaking Capacity	1.2 kA 600 V AC-15, 720 VA 1.5 kA 480 V AC-15, 720 VA 3 kA 240 V AC-15, 720 VA 6 kA 120 V AC-15, 720 VA 0.1 kA 600 V DC-13 0.27 kA 250 V DC-13 0.55 kA 125 V DC-13
Net Weight	0.52 lb(US) (0.235 kg)
Device Presentation	Complete product
Cap/Operator Or Lens Colour	Red
Lens Type	Fresnel
[Us] Rated Supply Voltage	24...28 V
Light Source Colour	Red
Lens Material	Polycarbonate
Size	30 mm

Environment

Standards	EN/IEC 60947-1 EN/IEC 60947-5-4 CSA C22.2 No 14 UL 508 JIS C8201-5-1 JIS C 852 EN/IEC 60947-5-1 JIS C8201-1
Product Certifications	UL 508 NEMA
Protective Treatment	TC
Ambient Air Temperature For Storage	-40…158 °F (-40…70 °C)
Ambient Air Temperature For Operation	-13…158 °F (-25…70 °C)
Vibration Resistance	7 gn 2…500 Hz)IEC 60068-2-6
Shock Resistance	50 gn IEC 60068-2-27
Electrical Shock Protection Class	Class II IEC 61140
Ip Degree Of Protection	IP66 IEC 60529
Nema Degree Of Protection	NEMA 1 NEMA 12 NEMA 13 NEMA 2 NEMA 3 NEMA 3R NEMA 4

Ordering and shipping details

Category	US10CS121426
Discount Schedule	0CS1
Gtin	785901036111

Returnability	Yes
Country Of Origin	US

Packing Units

Unit Type Of Package 1	PCE
Number Of Units In Package 1	1
Package 1 Height	2.00 in (5.08 cm)
Package 1 Width	2.30 in (5.842 cm)
Package 1 Length	4.50 in (11.43 cm)
Package 1 Weight	6.40 oz (181.437 g)

Contractual warranty

Warranty	18 months

Sustainability

Green Premium™ label is Schneider Electric's commitment to delivering products with best-in-class environmental performance. Green Premium promises compliance with the latest regulations, transparency on environmental impacts, as well as circular and low-CO_2 products.

Guide to assessing product sustainability is a white paper that clarifies global eco-label standards and how to interpret environmental declarations.

Learn more about Green Premium >

Guide to assess a product's sustainability >

Transparency RoHS/REACh

Well-being performance

Mercury Free

Rohs Exemption Information Yes

Certifications & Standards

Reach Regulation	REACh Declaration
Eu Rohs Directive	Pro-active compliance (Product out of EU RoHS legal scope)
China Rohs Regulation	China RoHS declaration
Environmental Disclosure	Product Environmental Profile
Weee	The product must be disposed on European Union markets following specific waste collection and never end up in rubbish bins.
Circularity Profile	No need of specific recycling operations Circularity Profile
California Proposition 65	WARNING: This product can expose you to chemicals including: Lead and lead compounds, which is known to the State of California to cause cancer and birth defects or other reproductive harm. For more information go to www.P65Warnings.ca.gov

Dimensions Drawings

Dimensions

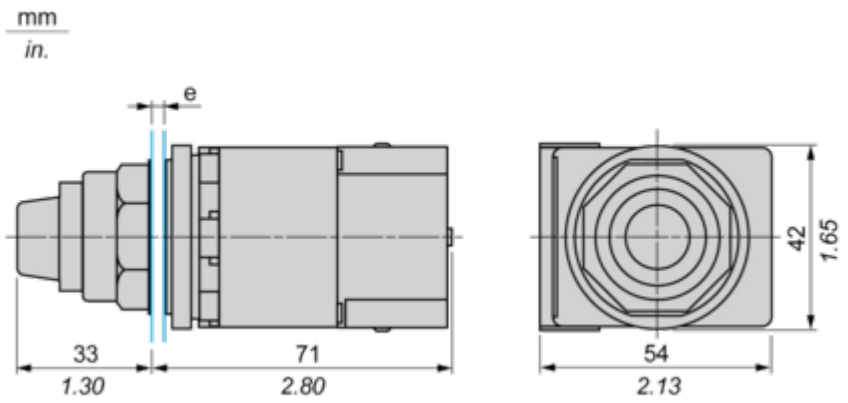

e panel thickness: 1 to 6 mm / 0.04 to 0.24 in.

Mounting and Clearance

Contact Block Mounting Position

Top and Rear views

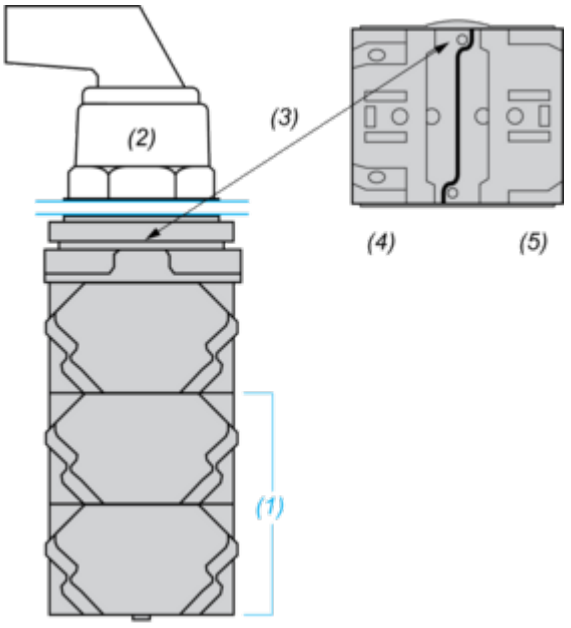

(1) It is possible to mount up to 3 levels of contacts blocks (maximum of 6 contacts blocks)
(2) Operator
(3) Locating notch
(4) Side 1
(5) Side 2

Panel Cut-Out

Clearance

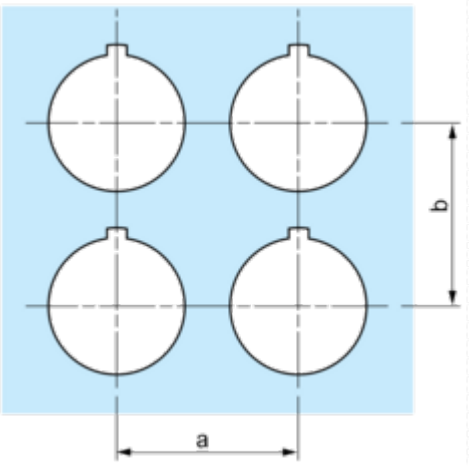

Legend plate	a min.		b min.	
	mm	in.	mm	in.
9001KN2••	57.2	2.25	44.5	1.75
9001KN3••	57.2	2.25	50.8	2.00

Individual Cut-outs Details
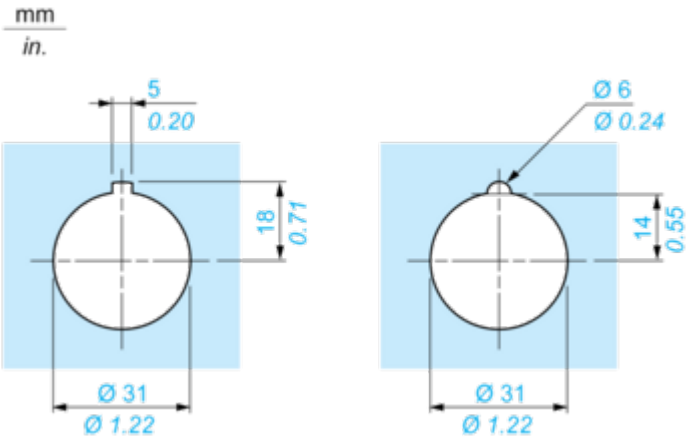
2 alternatives