# Product data sheet

Specifications

## Push-to-test pilot light, Harmony 9001SK, plastic, polycarbonate, fresnel lens, red, 30mm, LED red, 24...28V

9001SKT35LRR31

**Product availability: Stock - Normally stocked in distribution facility**

**Price*: 197.00 USD**

## Main

| | |
|---|---|
| **Range Of Product** | Harmony 9001SK |
| **Product Or Component Type** | Push-to-test pilot light |
| **Device Short Name** | 9001SK |
| **Type Of Operator** | spring return |
| **Operator Profile** | Red projecting, unmarked |

## Complementary

| | |
|---|---|
| **Bezel Material** | Plastic |
| **Mounting Diameter** | 1.18 in (30 mm) |
| **Shape Of Signaling Unit Head** | Octagonal |
| **Light Source** | LED |
| **Light Source** | LED |
| **Bulb Base** | BA 9s |
| **Light Block Supply** | Direct |
| **[Us] Rated Supply Voltage** | 24 V AC/DC |
| **[Us] Rated Supply Voltage** | 24...28 V AC/DC |
| **Contacts Type And Composition** | 1 C/O |
| **Connections - Terminals** | Screw clamp terminals 1 x 0.22...2 x 1.5 mm² EN/IEC 60947-1 |
| **Tightening Torque** | 7.08 lbf.in (0.8 N.m) EN/IEC 60947-1 |
| **Shape Of Screw Head** | Cross slotted |
| **Mechanical Durability** | 5000000 cycles |
| **Operating Position** | Any position |
| **[Ui] Rated Insulation Voltage** | 250 V 3)EN/IEC 60947-1 |
| **[Uimp] Rated Impulse Withstand Voltage** | 2.5 kV EN/IEC 60947-1 |
| **Contacts Material** | Silver alloy contacts |
| **Positive Opening** | Without |
| **Short-Circuit Protection** | 10 A cartridge fuse EN/IEC 60947-5-1 |
| **[Ith] Conventional Free Air Thermal Current** | 10 A |

Price is “List Price” and may be subject to a trade discount – check with your local distributor or retailer for actual price.

Disclaimer: This documentation is not intended as a substitute for and is not to be used for determining suitability or reliability of these products for specific user applications

| | |
|---|---|
| **[Icm] Rated Short-Circuit Making Capacity** | 12 kA 600 V AC-15, 7200 VA<br>15 kA 480 V AC-15, 7200 VA<br>30 kA 240 V AC-15, 7200 VA<br>60 kA 120 V AC-15, 7200 VA |
| **Rated Breaking Capacity** | 1.2 kA 600 V AC-15, 720 VA<br>1.5 kA 480 V AC-15, 720 VA<br>3 kA 240 V AC-15, 720 VA<br>6 kA 120 V AC-15, 720 VA<br>0.1 kA 600 V DC-13<br>0.27 kA 250 V DC-13<br>0.55 kA 125 V DC-13 |
| **Net Weight** | 0.43 lb(US) (0.195 kg) |
| **Device Presentation** | Complete product |
| **Cap/Operator Or Lens Colour** | Red |
| **Lens Type** | Fresnel |
| **[Us] Rated Supply Voltage** | 24...28 V |
| **Light Source Colour** | Red |
| **Lens Material** | Polycarbonate |
| **Size** | 30 mm |

## Environment

| | |
|---|---|
| **Standards** | JIS C 852<br>UL 508<br>JIS C8201-5-1<br>EN/IEC 60947-1<br>EN/IEC 60947-5-4<br>EN/IEC 60947-5-1<br>CSA C22.2 No 14<br>JIS C8201-1 |
| **Product Certifications** | NEMA<br>UL 508 |
| **Protective Treatment** | TC |
| **Ambient Air Temperature For Storage** | -40…158 °F (-40…70 °C) |
| **Ambient Air Temperature For Operation** | -13…158 °F (-25…70 °C) |
| **Vibration Resistance** | 7 gn 2…500 Hz)IEC 60068-2-6 |
| **Shock Resistance** | 50 gn IEC 60068-2-27 |
| **Electrical Shock Protection Class** | Class II IEC 61140 |
| **Ip Degree Of Protection** | IP66 IEC 60529 |
| **Nema Degree Of Protection** | NEMA 1<br>NEMA 12<br>NEMA 13<br>NEMA 2<br>NEMA 3<br>NEMA 3R<br>NEMA 4<br>NEMA 4X |

## Ordering and shipping details

| | |
|---|---|
| **Category** | US10CS121429 |
| **Discount Schedule** | 0CS1 |
| **Gtin** | 785901159803 |
| **Returnability** | Yes |
| **Country Of Origin** | US |

## Packing Units

| | |
|---|---|
| **Unit Type Of Package 1** | PCE |
| **Number Of Units In Package 1** | 1 |
| **Package 1 Height** | 2.40 in (6.096 cm) |
| **Package 1 Width** | 4.50 in (11.43 cm) |
| **Package 1 Length** | 2.00 in (5.08 cm) |
| **Package 1 Weight** | 4.48 oz (127.006 g) |

## Contractual warranty

| | |
|---|---|
| **Warranty** | 18 months |

## Sustainability

**Green Premium™ label** is Schneider Electric's commitment to delivering products with best-in-class environmental performance. Green Premium promises compliance with the latest regulations, transparency on environmental impacts, as well as circular and low-$CO_2$ products.

**Guide to assessing product sustainability** is a white paper that clarifies global eco-label standards and how to interpret environmental declarations.

Learn more about Green Premium >

Guide to assess a product's sustainability >

Transparency RoHS/REACh

## Well-being performance

| | |
|---|---|
| Reach Free Of Svhc | |
| Toxic Heavy Metal Free | |
| Mercury Free | |
| Rohs Exemption Information | Yes |

## Certifications & Standards

| | |
|---|---|
| **Reach Regulation** | REACh Declaration |
| **Eu Rohs Directive** | Pro-active compliance (Product out of EU RoHS legal scope)<br>EU RoHS Declaration |
| **China Rohs Regulation** | China RoHS declaration |
| **Environmental Disclosure** | Product Environmental Profile |
| **Weee** | The product must be disposed on European Union markets following specific waste collection and never end up in rubbish bins. |
| **Circularity Profile** | End of Life Information |
| **California Proposition 65** | WARNING: This product can expose you to chemicals including: Nickel compounds, which is known to the State of California to cause cancer, and Di-isodecyl phthalate (DIDP), which is known to the State of California to cause birth defects or other reproductive harm. For more information go to www.P65Warnings.ca.gov |

## Dimensions Drawings

### Dimensions

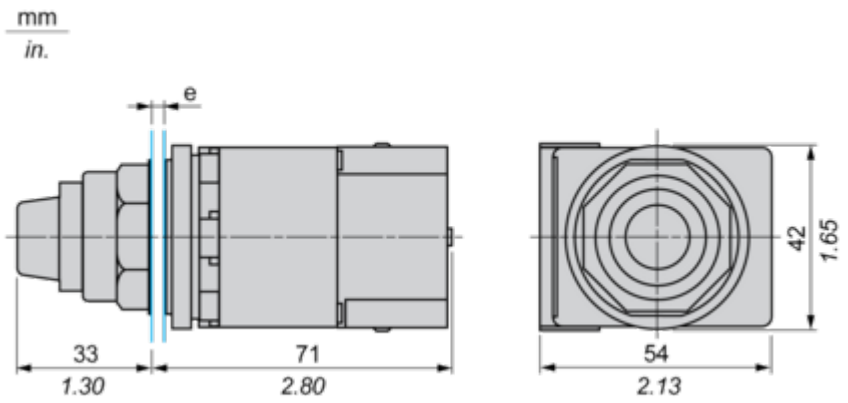


**e** panel thickness: 1 to 6 mm / 0.04 to 0.24 in.

## Mounting and Clearance

### Contact Block Mounting Position

Top and Rear views

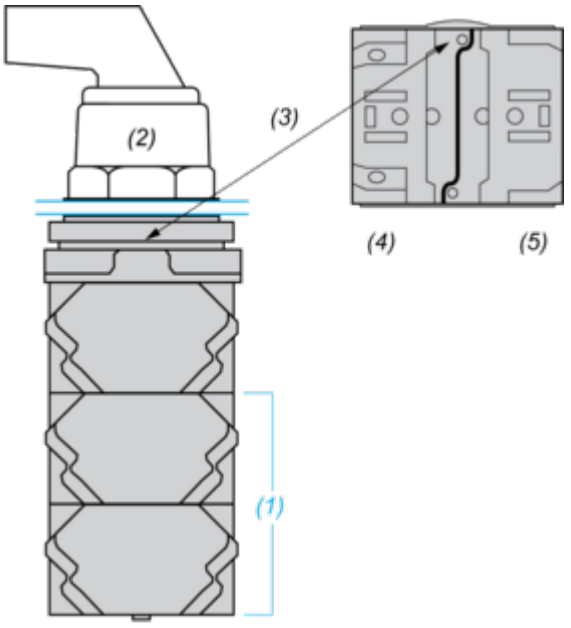


**(1)** It is possible to mount up to 3 levels of contacts blocks (maximum of 6 contacts blocks)
**(2)** Operator
**(3)** Locating notch
**(4)** Side 1
**(5)** Side 2