Product data sheet

Specifications

Power Relay, DPST-NO, class F coil insulation, DIN rail and panel mount cover, 30A, 120V AC, 2NO

92S7A22D-120

Product availability: Stock - Normally stocked in distribution facility

Price*: 21.12 USD

Main

Product Range	Legacy
Product Type	Power relay
Switch Function	DPST
Contact Composition	2 NO

Complementary

Input Current	30 A
Contacts Material	Silver alloy contacts
Maximum Switching Capacity	7500 VA/700 W AC/DC 13 mm gap between two relays 6250 VA/700 W AC/DC relays side by side without a gap
Minimum Switching Capacity	6000 mW 500 mA / 12 V NO
Coil Resistance	4250 Ohm
Input Voltage	120 V AC
Drop-Out Voltage Threshold	>= 0.1 Uc DC >= 0.15 Uc AC
Rated Operational Current	30 A at 277 V AC (NO) conforming to UL 20 A at 28 V DC (NO) (on resistive load) conforming to UL 96 A at 240 V AC (NO) (full load) conforming to UL 10 A at 120 V AC (NO) (tungsten filament) conforming to UL 6 A at 250 V AC (NO) (tungsten filament) conforming to UL 30 A at 250 V AC (NO) conforming to IEC 25 A at 28 V DC (NO) conforming to IEC
Power Consumption In Va	3.2…4.4 VA AC
Voltage Range	0.8...1.1 Un AC/DC
Maximum Switching Voltage	300 V AC/DC UL 250 V AC/DC IEC
Motor Power Hp	1.0 hp 120 V AC 50/60 Hz 3 hp 240 V AC 50/60 Hz
Electrical Insulation Class	Class F coil
Mounting	DIN rail Panel mounted
Product Weight	2.89 oz (82 g)

Environment

Ambient Air Temperature For Operation	-40…131 °F (-40…55 °C)

Price is “List Price” and may be subject to a trade discount – check with your local distributor or retailer for actual price.

Disclaimer: This documentation is not intended as a substitute for and is not to be used for determining suitability or reliability of these products for specific user applications

Ambient Air Temperature For Storage	-40…185 °F (-40…85 °C)
Product Certifications	UL Listed CSA CE
Electrical Durability	100000 cycles resistive 25000 cycles tungsten
Mechanical Durability	5000000 cycles
Dielectric Strength	4000 V AC between coil and contact 1500 V AC between contacts 2000 V AC between poles
Shock Resistance	10 gn in operation 30 gn not in operation
Vibration Resistance	+/- 1 mm 10…35 Hz) 3 gn 35…150 Hz)
Surge Withstand Duration	1.2/50 µs

Ordering and shipping details

Category	US10CP221127
Discount Schedule	0CP2
Gtin	3606480781957
Returnability	Yes
Country Of Origin	CN

Packing Units

Unit Type Of Package 1	PCE
Number Of Units In Package 1	1
Package 1 Height	1.73 in (4.4 cm)
Package 1 Width	1.33 in (3.37 cm)
Package 1 Length	2.70 in (6.85 cm)
Package 1 Weight	3.26 oz (92.5 g)
Unit Type Of Package 2	BB1
Number Of Units In Package 2	10
Package 2 Height	1.97 in (5 cm)
Package 2 Width	5.59 in (14.2 cm)
Package 2 Length	7.83 in (19.9 cm)
Package 2 Weight	32.63 oz (925 g)
Unit Type Of Package 3	S02
Number Of Units In Package 3	60
Package 3 Height	5.91 in (15 cm)
Package 3 Width	11.81 in (30 cm)
Package 3 Length	15.75 in (40 cm)
Package 3 Weight	13.56 lb(US) (6.15 kg)

Sustainability

Green Premium™ label is Schneider Electric's commitment to delivering products with best-in-class environmental performance. Green Premium promises compliance with the latest regulations, transparency on environmental impacts, as well as circular and low-CO_2 products.

Guide to assessing product sustainability is a white paper that clarifies global eco-label standards and how to interpret environmental declarations.

Learn more about Green Premium >

Guide to assess a product's sustainability >

Transparency RoHS/REACh

Well-being performance

Reach Free Of Svhc

Rohs Exemption Information	Yes

Certifications & Standards

Reach Regulation	REACh Declaration
Eu Rohs Directive	Pro-active compliance (Product out of EU RoHS legal scope) EU RoHS Declaration
China Rohs Regulation	China RoHS declaration
Environmental Disclosure	Product Environmental Profile
Weee	The product must be disposed on European Union markets following specific waste collection and never end up in rubbish bins.
Circularity Profile	No need of specific recycling operations
California Proposition 65	WARNING: This product can expose you to chemicals including: Lead and lead compounds, which is known to the State of California to cause cancer and birth defects or other reproductive harm. For more information go to www.P65Warnings.ca.gov

Dimensions Drawings

Approximate Dimensions

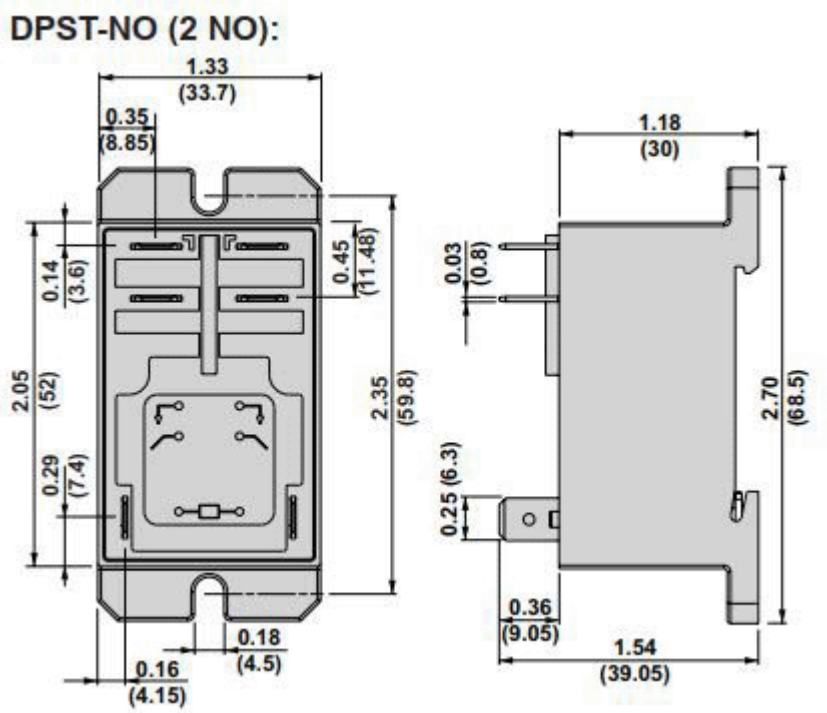

Connections and Schema

Connections and Wiring Diagrams
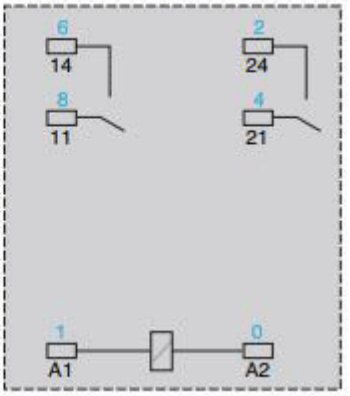
DPST-NO (2 NO):