Product data sheet

Specifications

Green Premium™

variable speed drive ATV32 - 1.5 kw - 200 V - 1 phase - with heat sink

ATV32HU15M2

Discontinued on: Jan 23, 2021

Discontinued

Main

Range Of Product	Altivar 32
Product Or Component Type	Variable speed drive
Product Destination	Asynchronous motors Synchronous motors
Product Specific Application	Complex machines
Function Available	-
Assembly Style	With heat sink
Component Name	ATV32
Emc Filter	Class C2 EMC filter integrated
Phase	1 phase
[Us] Rated Supply Voltage	200...240 V - 15...10 %
Supply Voltage Limits	170…264 V
Supply Frequency	50...60 Hz - 5...5 %
Network Frequency	47.5...63 Hz
Motor Power Kw	1.5 kW 200...240 V
Maximum Horse Power Rating	2 hp 200...240 V

Complementary

Line Current	14.8 A 240 V 1 phase 1.5 kW / 2 hp 17.6 A 200 V 1 phase 1.5 kW / 2 hp
Apparent Power	3.6 kVA 240 V 1 phase 1.5 kW / 2 hp
Prospective Line Isc	1 kA 1 phase
Nominal Output Current	8 A 4 kHz 240 V 1.5 kW / 2 hp
Maximum Transient Current	12 A 60 s 1.5 kW / 2 hp
Output Frequency	0.0005…0.599 kHz
Nominal Switching Frequency	4 kHz
Switching Frequency	2...16 kHz adjustable
Speed Range	1…100 asynchronous motor in open-loop mode
Speed Accuracy	+/- 10 % of nominal slip 0.2 Tn to Tn
Torque Accuracy	+/- 15 %
Transient Overtorque	170…200 %

Price is “List Price” and may be subject to a trade discount – check with your local distributor or retailer for actual price.

Disclaimer: This documentation is not intended as a substitute for and is not to be used for determining suitability or reliability of these products for specific user applications

Braking Torque	<= 170 % with braking resistor
Asynchronous Motor Control Profile	Voltage/frequency ratio, 5 points Flux vector control without sensor, standard Voltage/frequency ratio, 2 points Voltage/frequency ratio - Energy Saving, quadratic U/f Flux vector control without sensor - Energy Saving, NoLoad law
Synchronous Motor Control Profile	Vector control without sensor
Regulation Loop	Adjustable PID regulator
Motor Slip Compensation	Adjustable 0...300 % Not available in voltage/frequency ratio (2 or 5 points) Automatic whatever the load
Local Signalling	1 LED red drive voltage 1 LED green CANopen run 1 LED red CANopen error 1 LED red drive fault
Output Voltage	<= power supply voltage
Noise Level	43 dB 86/188/EEC
Insulation	Electrical between power and control
Electrical Connection	Screw terminal 0.5...1.5 mm², AWG 18...AWG 14 control) Removable screw terminals 1.5...2.5 mm², AWG 14...AWG 12 motor/braking resistor) Screw terminal 2.5...4 mm², AWG 12...AWG 10 power supply)
Tightening Torque	4.43 lbf.in (0.5 N.m), 4.4 lb/ft control) 6.20 lbf.in (0.7 N.m), 7.1 lb/ft motor/braking resistor) 5.31 lbf.in (0.6 N.m), 5.3 lb/ft power supply)
Supply	Internal supply for reference potentiometer (1 to 10 kOhm) 10.5 V DC +/- 5 %, <10 mA overload and short-circuit protection
Analogue Input Number	3
Analogue Input Type	AI1 voltage 0...10 V DC 30000 Ohm 10 bits AI2 bipolar differential voltage +/- 10 V DC 30000 Ohm 10 bits AI3 current 0...20 mA (or 4-20 mA, x-20 mA, 20-x mA or other patterns by configuration) 250 Ohm 10 bits
Sampling Duration	2 ms AI1, AI2, AI3) - analog 2 ms AO1) - analog
Response Time	LI1...LI6 8 ms +/- 0.7 ms logic R1A, R1B, R1C 2 ms relay R2A, R2C 2 ms relay
Accuracy	+/- 0.2 % AI1, AI2, AI3) for a temperature of -10...60 °C +/- 0.5 % AI1, AI2, AI3) for a temperature of 25 °C +/- 1 % AO1) for a temperature of 25 °C +/- 2 % AO1) for a temperature of -10...60 °C
Linearity Error	+/- 0.2...0.5 % of maximum value AI1, AI2, AI3) +/- 0.3 % AO1)
Analogue Output Number	1
Analogue Output Type	AO1 software-configurable current 0...20 mA 800 Ohm 10 bits AO1 software-configurable voltage 0...10 V 470 Ohm 10 bits
Discrete Output Number	3
Discrete Output Type	Configurable relay logic R1A, R1B, R1C) NO/NC - 100000 cycles Configurable relay logic R2A, R2B) NO - 100000 cycles Logic LO)
Minimum Switching Current	5 mA 24 V DC configurable relay logic
Maximum Switching Current	R1 3 A 250 V AC resistive, cos phi = 1 R1 4 A 30 V DC resistive, cos phi = 1 R1, R2 2 A 250 V AC inductive, cos phi = 0.4 R1, R2 2 A 30 V DC inductive, cos phi = 0.4 R2 5 A 250 V AC resistive, cos phi = 1 R2 5 A 30 V DC resistive, cos phi = 1

Discrete Input Number	7
Discrete Input Type	Programmable (sink/source) LI1...LI4)24...30 V DC level 1 PLC Programmable as pulse input 20 kpps LI5)24...30 V DC level 1 PLC Switch-configurable PTC probe LI6)24...30 V DC Safe torque off STO)24...30 V DC - 1500 Ohm
Discrete Input Logic	Negative logic (sink) LI1...LI6), > 19 V, < 13 V Positive logic (source) LI1...LI6), < 5 V, > 11 V
Acceleration And Deceleration Ramps	Ramp switching CUS S Deceleration ramp automatic stop DC injection Linear Deceleration ramp adaptation U
Braking To Standstill	By DC injection
Protection Type	Input phase breaks drive Overcurrent between output phases and earth drive Overheating protection drive Short-circuit between motor phases drive Thermal protection drive
Communication Port Protocol	CANopen Modbus
Connector Type	1 RJ45 on front face)Modbus/CANopen
Physical Interface	2-wire RS 485 Modbus
Transmission Frame	RTU Modbus
Type Of Polarization	No impedance Modbus
Number Of Addresses	1…127 CANopen 1…247 Modbus
Method Of Access	Slave CANopen
Electromagnetic Compatibility	1.2/50 µs - 8/20 µs surge immunity test, level 3 IEC 61000-4-5 Conducted radio-frequency immunity test, level 3 IEC 61000-4-6 Electrical fast transient/burst immunity test, level 4 IEC 61000-4-4 Electrostatic discharge immunity test, level 3 IEC 61000-4-2 Radiated radio-frequency electromagnetic field immunity test, level 3 IEC 61000-4-3 Voltage dips and interruptions immunity test IEC 61000-4-11
Width	2.36 in (60 mm)
Height	12.80 in (325 mm)
Depth	9.65 in (245 mm)
Net Weight	6.39 lb(US) (2.9 kg)
Option Card	Communication card CANopen daisy chain Communication card CANopen open style Communication card DeviceNet Communication card EtherNet/IP Communication card Profibus DP V1

Environment

Standards	EN 61800-3 environments 2 category C2 EN/IEC 61800-5-1 EN 61800-3 environments 1 category C2 EN/IEC 61800-3 EN 55011 class A group 1
Product Certifications	UL GOST NOM 117 CSA C-tick
Marking	CE

Pollution Degree	2 EN/IEC 61800-5-1
Ip Degree Of Protection	IP20 EN/IEC 61800-5-1
Vibration Resistance	1 gn 13…200 Hz) EN/IEC 60068-2-6 1.5 mm peak to peak 3…13 Hz) EN/IEC 60068-2-6
Shock Resistance	15 gn 11 msEN/IEC 60068-2-27
Relative Humidity	5…95 % without condensation IEC 60068-2-3 5…95 % without dripping water IEC 60068-2-3
Ambient Air Temperature For Operation	14…122 °F (-10…50 °C) without derating 122…140 °F (50…60 °C) with derating factor
Ambient Air Temperature For Storage	-13…158 °F (-25…70 °C)
Operating Altitude	<= 3280.84 ft (1000 m) without derating 3280.84...6561.68 ft (1000...2000 m) with current derating 1 % per 100 m
Operating Position	Vertical +/- 10 degree

Ordering and shipping details

Category	22152-ATV320/ATV312/ATV32 (.25 THRU 7.5HP)
Discount Schedule	CP4B
Gtin	00785901896524
Returnability	No
Country Of Origin	ID

Contractual warranty

Warranty	18 months

Sustainability

Green Premium™ label is Schneider Electric's commitment to delivering products with best-in-class environmental performance. Green Premium promises compliance with the latest regulations, transparency on environmental impacts, as well as circular and low-CO_2 products.

Guide to assessing product sustainability is a white paper that clarifies global eco-label standards and how to interpret environmental declarations.

Learn more about Green Premium >

Guide to assess a product's sustainability >

RoHS/REACh

Well-being performance

Mercury Free

Rohs Exemption Information	Yes

Certifications & Standards

Eu Rohs Directive	Pro-active compliance (Product out of EU RoHS legal scope) EU RoHS Declaration
China Rohs Regulation	China RoHS declaration
Weee	The product must be disposed on European Union markets following specific waste collection and never end up in rubbish bins.
Circularity Profile	End of Life Information
California Proposition 65	WARNING: This product can expose you to chemicals including: Lead and lead compounds, which is known to the State of California to cause cancer and birth defects or other reproductive harm. For more information go to www.P65Warnings.ca.gov

Dimensions Drawings

Size B

Dimensions

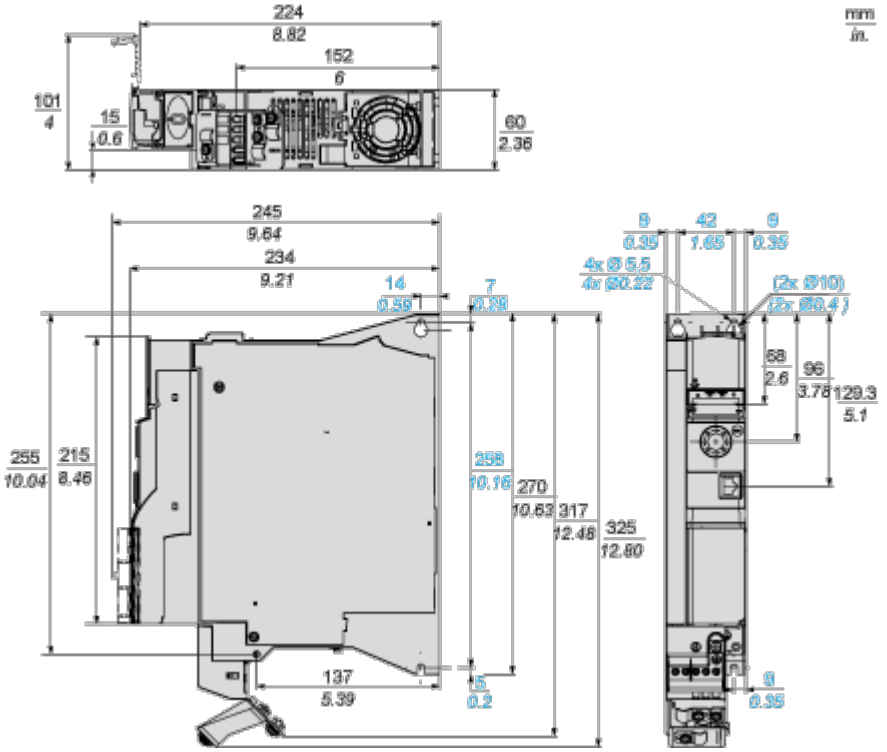

Mounting and Clearance

Mounting and Clearance

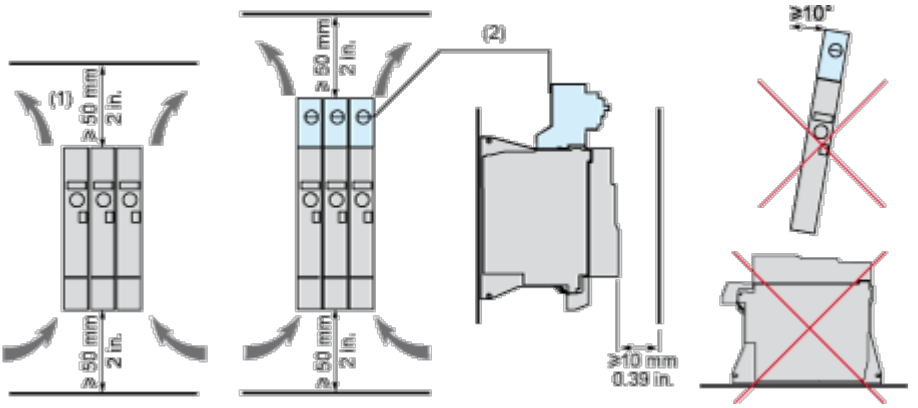

(1) Minimum value corresponding to thermal constraints. A 150 mm clearance may help to connect the ground.

(2) Optional GV2 circuit-breaker

Option: Protection Device, GV2 circuit-breaker

The drive is prepared to be equipped with an optional GV2 circuit-breaker.
The GV2 circuit-breaker is directly mounted on the drive. Mechanical and electrical link are made using the optional adapter. The options are supplied with detailed mounting instruction sheet.

NOTE: The product overall dimension, including GV2 adapter and EMC plate mounted, becomes 424 mm (16.7 in.)

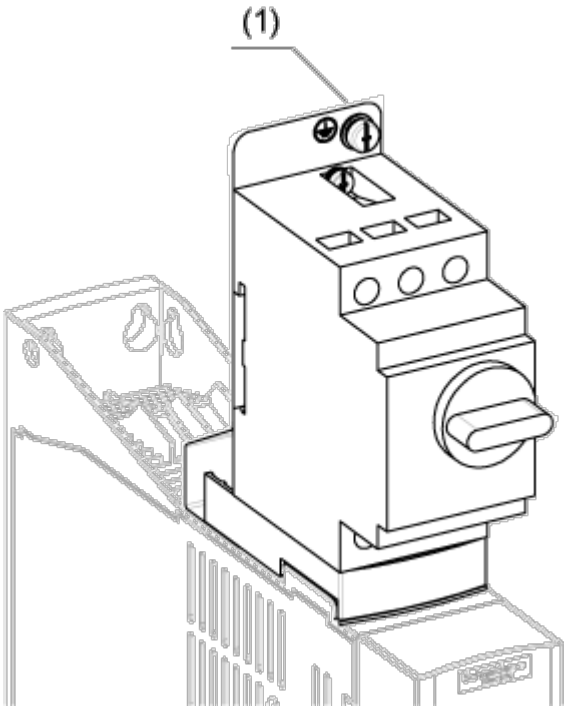

(1) Ground screw (HS type 2 - 5x12)

Connections and Schema

Connection Diagrams

Single or Three-phase Power Supply - Diagram with Line Contactor

Connection diagrams conforming to standards EN 954-1 category 1 and IEC/EN 61508 capacity SIL1, stopping category 0 in accordance with standard IEC/EN 60204-1.

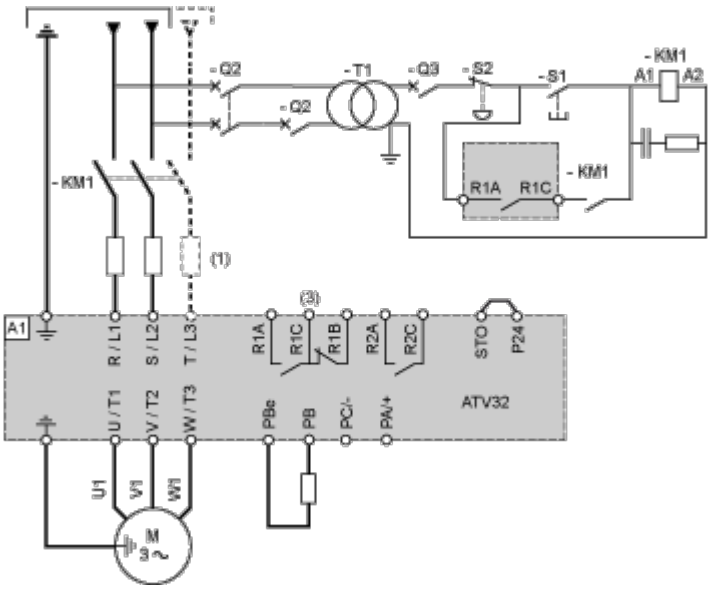

(1) Line choke (if used)

(3) Fault relay contacts, for remote signaling of drive status

Single or Three-phase Power Supply - Diagram with Switch Disconnect

Connection diagrams conforming to standards EN 954-1 category 1 and IEC/EN 61508 capacity SIL1, stopping category 0 in accordance with standard IEC/EN 60204-1.

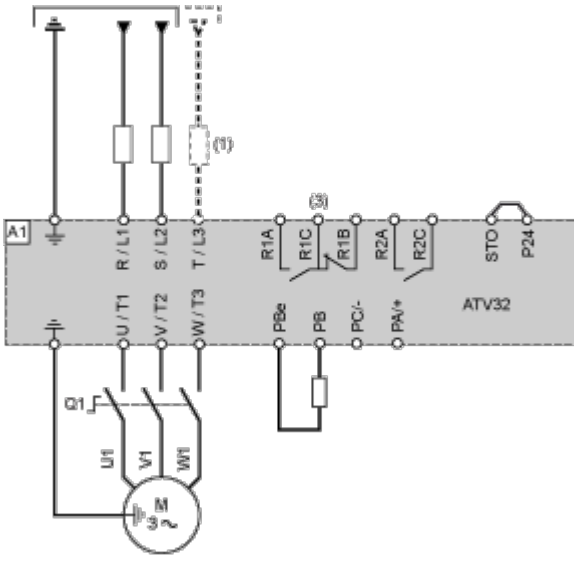

(1) Line choke (if used)

(3) Fault relay contacts, for remote signaling of drive status

Diagram with Preventa Safety Module (Safe Torque Off Function)

Connection diagrams conforming to standards EN 954-1 category 3 and IEC/EN 61508 capacity SIL2, stopping category 0 in accordance with standard IEC/EN 60204-1.
When the emergency stop is activated, the drive power supply is cut immediately and the motor stops in freewheel, according to category 0 of standard IEC/EN 60204-1.
A contact on the Preventa XPS AC module must be inserted in the brake control circuit to engage it safely when the STO (Safe Torque Off) safety function is activated.

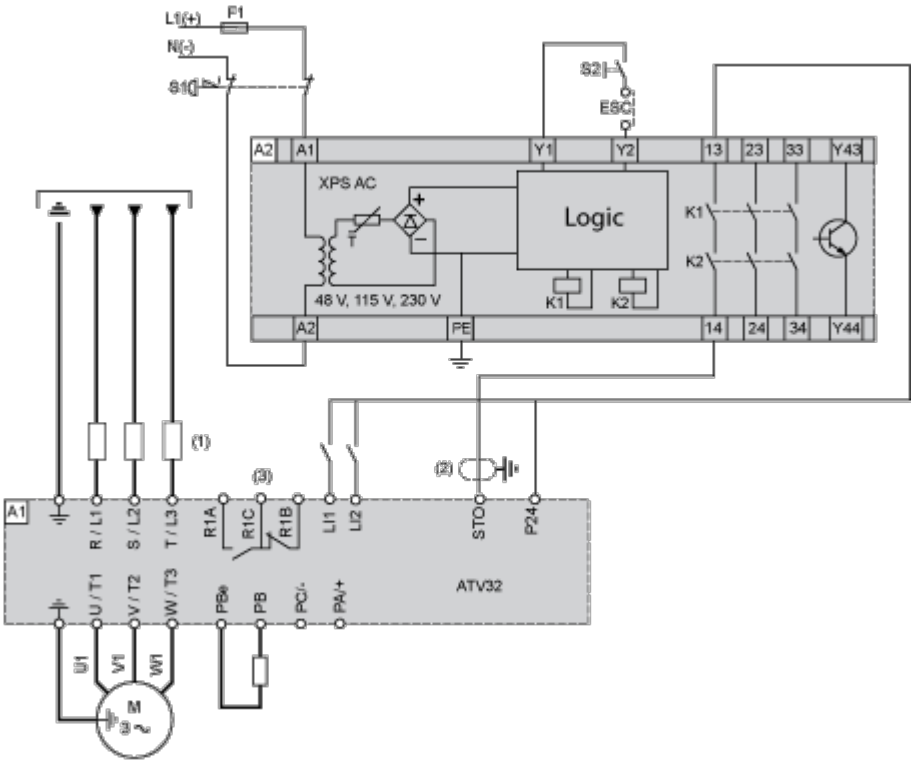

(1) Line choke (if used)

(2) It is essential to connect the shielding to the ground.

(3) Fault relay contacts, for remote signaling of drive status

The STO safety function integrated into the product can be used to implement an "EMERGENCY STOP" (IEC 60204-1) for category 0 stops.
With an additional, approved EMERGENCY STOP module, it is also possible to implement category 1 stops.
STO function
The STO safety function is triggered via 2 redundant inputs. The circuits of the two inputs must be separate so that there are always two channels. The switching process must be simultaneous for both inputs (offset < 1 s).
The power stage is disabled and an error message is generated. The motor can no longer generate torque and coasts down without braking. A restart is possible after resetting the error message with a "Fault Reset".
The power stage is disabled and an error message is generated if only one of the two inputs is switched off or if the time offset is too great. This error message can only be reset by switching off the product.

Diagram without Preventa Safety Module

Connection diagrams conforming to standards EN 954-1 category 2 and IEC/EN 61508 capacity SIL1, stopping category 0 in accordance with standard IEC/EN 60204-1.
The connection diagram below is suitable for use with machines with a short freewheel stop time (machines with low inertia or high resistive torque).
When the emergency stop is activated, the drive power supply is cut immediately and the motor stops in freewheel, according to category 0 of standard IEC/EN 60204-1.

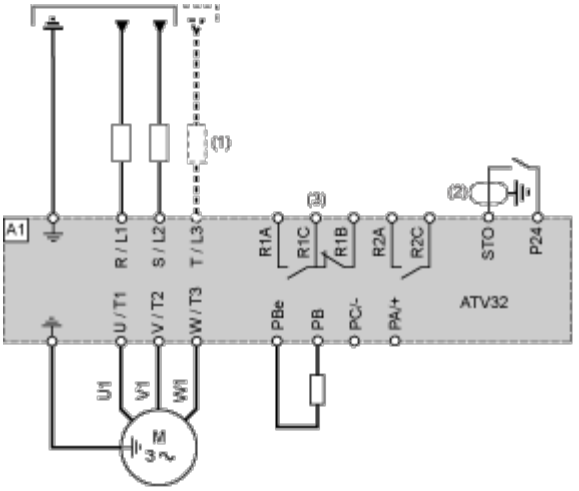

(1) Line choke (if used)

(2) It is essential to connect the shielding to the ground.

(3) Fault relay contacts, for remote signaling of drive status

The STO safety function integrated into the product can be used to implement an "EMERGENCY STOP" (IEC 60204-1) for category 0 stops.

Control Connection Diagram in Source Mode

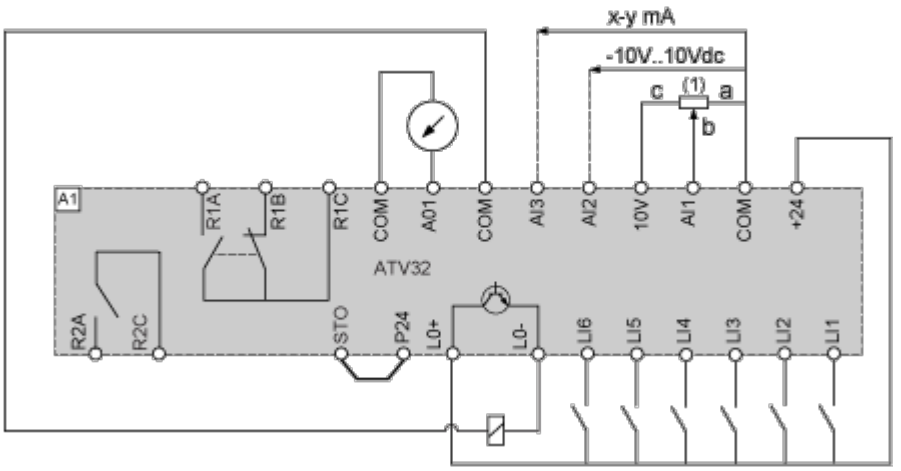

(1) Reference potentiometer SZ1RV1202 (2.2 kΩ) or similar (10 kΩ maximum)

Performance Curves

Derating Curves

Derating curve for the nominal drive current (In) as a function of temperature and switching frequency.

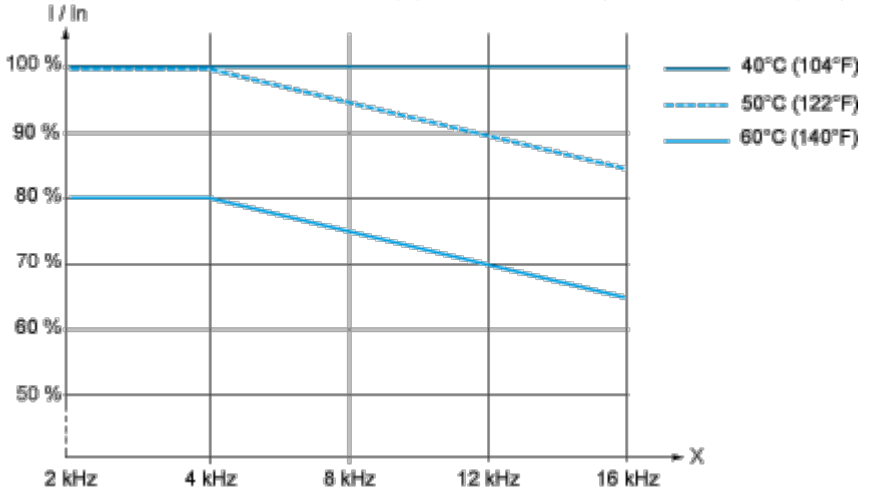

X Switching frequency

Above 4 kHz, the drive will reduce the switching frequency automatically in the event of an excessive temperature rise.

Technical Description

Sink / Source Switch Configuration (SW1)

The logic input switch (SW1) is used to adapt the operation of the logic inputs to the technology of the programmable controller outputs.

Switch SW1 set to “Source” position

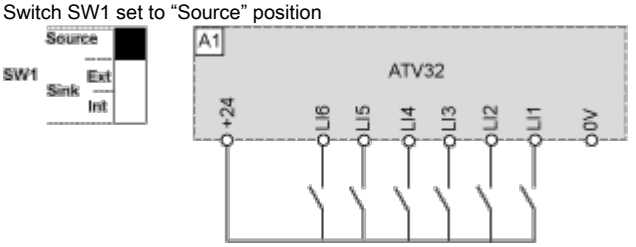

Switch SW1 set to “Source” position and use of an external power supply for the LIs

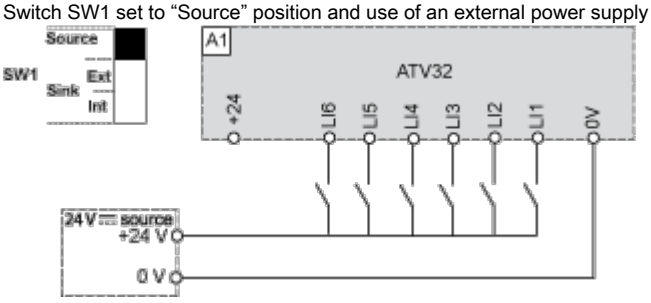

Switch SW1 set to “Sink Int” position

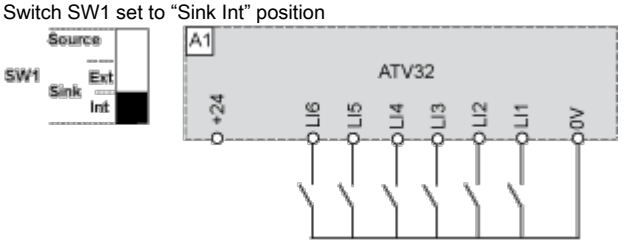
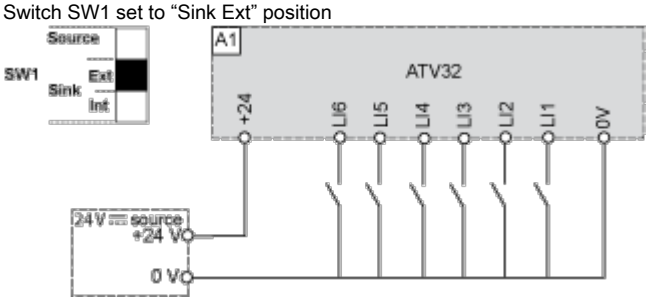
Switch SW1 set to “Sink Ext” position