Product data sheet

Specifications

Green Premium™

servo motor BMH, Lexium 32, 1.4Nm, 8000rpm, untapped shaft, without brake, IP54, 16 multiturn encoder

BMH0701T07A2A

Product availability: Non-Stock - Not normally stocked in distribution facility

Price*: 1,085.00 USD

Main

Product Or Component Type	Servo motor
Device Short Name	BMH
Maximum Mechanical Speed	8000 rpm
Continuous Stall Torque	12.39 lbf.in (1.4 N.m) LXM32.U90M2 3 A, 230 V, single phase 12.39 lbf.in (1.4 N.m) LXM32.D18M2 6 A, 115 V, single phase
Peak Stall Torque	35.40 lbf.in (4 N.m) LXM32.U90M2 3 A, 230 V, single phase 37.17 lbf.in (4.2 N.m) LXM32.D18M2 6 A, 115 V, single phase
Nominal Output Power	450 W LXM32.U90M2 3 A, 230 V, single phase 350 W LXM32.D18M2 6 A, 115 V, single phase
Nominal Torque	9.74 lbf.in (1.1 N.m) LXM32.U90M2 3 A, 230 V, single phase 11.95 lbf.in (1.35 N.m) LXM32.D18M2 6 A, 115 V, single phase
Nominal Speed	4000 rpm LXM32.U90M2 3 A, 230 V, single phase 2500 rpm LXM32.D18M2 6 A, 115 V, single phase
Product Compatibility	LXM32.D18M2 115 V single phase LXM32.U90M2 230 V single phase
Shaft End	Smooth shaft
Ip Degree Of Protection	IP54 standard
Speed Feedback Resolution	32768 points/turn x 4096 turns
Holding Brake	Without
Mounting Support	International standard flange
Electrical Connection	Rotatable right-angled connectors

Complementary

Range Compatibility	Lexium 32
[Us] Rated Supply Voltage	240 V
Phase	Three phase
Continuous Stall Current	2.85 A
Continuous Power	1.05 W
Maximum Current Irms	9.6 A LXM32.D18M2 9.6 A LXM32.U90M2
Maximum Permanent Current	9.56 A
Second Shaft	Without second shaft end

Price is “List Price” and may be subject to a trade discount – check with your local distributor or retailer for actual price.

Disclaimer: This documentation is not intended as a substitute for and is not to be used for determining suitability or reliability of these products for specific user applications

Shaft Diameter	0.43 in (11 mm)
Shaft Length	0.91 in (23 mm)
Feedback Type	Multiturn SinCos Hiperface
Motor Flange Size	2.76 in (70 mm)
Number Of Motor Stacks	1
Torque Constant	0.49 N.m/A 248 °F (120 °C)
Back Emf Constant	31.17 V/krpm 248 °F (120 °C)
Number Of Motor Poles	10
Rotor Inertia	0.59 kg.cm²
Stator Resistance	3.2 Ohm 68 °F (20 °C)
Stator Inductance	9.1 mH 68 °F (20 °C)
Stator Electrical Time Constant	2.8 ms 68 °F (20 °C)
Maximum Radial Force Fr	660 N 1000 rpm 520 N 2000 rpm 460 N 3000 rpm 410 N 4000 rpm 380 N 5000 rpm 360 N 6000 rpm
Maximum Axial Force Fa	0.2 x Fr
Type Of Cooling	Natural convection
Length	4.80 in (122 mm)
Centring Collar Diameter	2.36 in (60 mm)
Centring Collar Depth	0.10 in (2.5 mm)
Number Of Mounting Holes	4
Mounting Holes Diameter	0.22 in (5.5 mm)
Circle Diameter Of The Mounting Holes	3.23 in (82 mm)
Net Weight	3.53 lb(US) (1.6 kg)

Ordering and shipping details

Category	US1PC5318282
Discount Schedule	PC53
Gtin	3606485194387
Returnability	No
Country Of Origin	DE

Packing Units

Unit Type Of Package 1	PCE
Number Of Units In Package 1	1
Package 1 Height	4.33 in (11.0 cm)
Package 1 Width	7.48 in (19.0 cm)
Package 1 Length	15.55 in (39.5 cm)
Package 1 Weight	4.84 lb(US) (2.196 kg)
Unit Type Of Package 2	S04

Number Of Units In Package 2	4
Package 2 Height	11.81 in (30.0 cm)
Package 2 Width	15.75 in (40.0 cm)
Package 2 Length	23.62 in (60.0 cm)
Package 2 Weight	22.13 lb(US) (10.036 kg)

Contractual warranty

Warranty	18 months

Sustainability

Green Premium™ label is Schneider Electric's commitment to delivering products with best-in-class environmental performance. Green Premium promises compliance with the latest regulations, transparency on environmental impacts, as well as circular and low-CO_2 products.

Guide to assessing product sustainability is a white paper that clarifies global eco-label standards and how to interpret environmental declarations.

Learn more about Green Premium >

Guide to assess a product's sustainability >

Transparency RoHS/REACh

Well-being performance

Mercury Free	
Rohs Exemption Information	Yes
Pvc Free	

Certifications & Standards

Reach Regulation	REACh Declaration
Eu Rohs Directive	Pro-active compliance (Product out of EU RoHS legal scope)
China Rohs Regulation	China RoHS declaration
Environmental Disclosure	Product Environmental Profile
Weee	The product must be disposed on European Union markets following specific waste collection and never end up in rubbish bins.
Circularity Profile	No need of specific recycling operations
California Proposition 65	WARNING: This product can expose you to chemicals including: Lead and lead compounds, which is known to the State of California to cause cancer and birth defects or other reproductive harm. For more information go to www.P65Warnings.ca.gov

Dimensions Drawings

Servo Motors Dimensions

Example with Straight Connectors

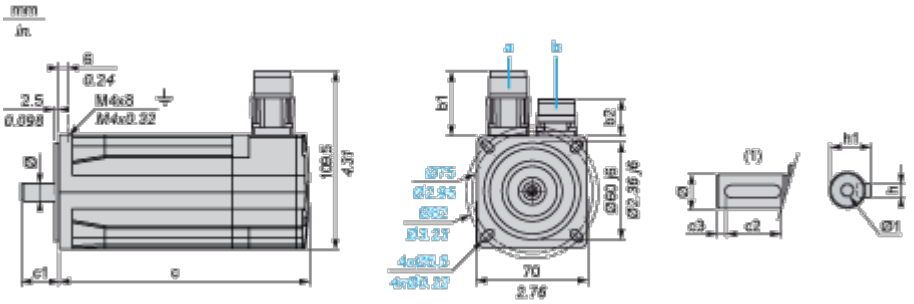

a: Power supply for servo motor brake

b: Power supply for servo motor encoder

(1) Shaft end, keyed slot (optional)

Dimensions in mm

Straight connectors		Rotatable angled connectors		c (without brake)	c (with brake)	c1	c2	c3	h	h1	Ø	Ø1 for screws
b1	b2	b1	b2									
39.5	25.5	39.5	39.5	122	161	23	18	2.5	4 h9	$12.5^{+0}_{-0.13}$	11 k6	M4 x 14

Dimensions in in.

Straight connectors		Rotatable angled connectors		c (without brake)	c (with brake)	c1	c2	c3	h	h1	Ø	Ø1 for screws
b1	b2	b1	b2									
1.55	1	1.55	1.55	4.80	6.33	0.90	0.70	0.09	0.16 h9	$0.49^{+0}_{-0.0051}$	0.43 k6	M4 x 0.55

Performance Curves

115 V Single-Phase Supply Voltage

Torque/Speed Curves

Servo motor with LXM32•D18M2 servo drive

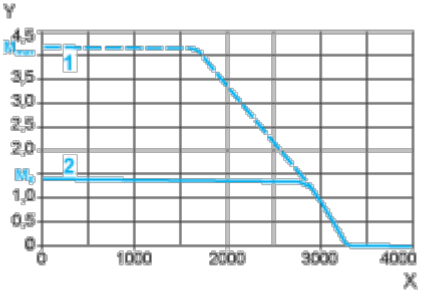

X Speed in rpm

Y Torque in Nm

1 Peak torque

2 Continuous torque

230 V Single-Phase Supply Voltage

Torque/Speed Curves

Servo motor with LXM32•U90M2 servo drive

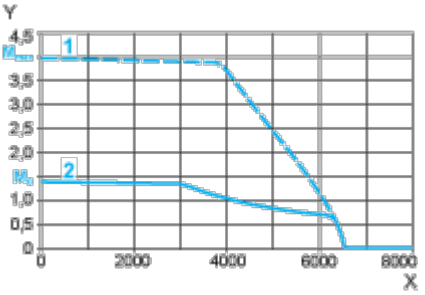

X Speed in rpm

Y Torque in Nm

1 Peak torque

2 Continuous torque