Product data sheet

Specifications

servo motor BMH, Lexium 32, 8.4Nm, 6000rpm, keyed shaft, with brake, IP54, 16 multiturn encoder

BMH1003P17F2A

Product availability: Stock - Normally stocked in distribution facility

Price*: 1,965.00 USD

Main

Product Or Component Type	Servo motor
Device Short Name	BMH
Maximum Mechanical Speed	6000 rpm
Continuous Stall Torque	74.35 lbf.in (8.4 N.m) LXM32.D30N4 10 A, 400 V, three phase 74.35 lbf.in (8.4 N.m) LXM32.D30N4 10 A, 480 V, three phase
Peak Stall Torque	222.15 lbf.in (25.1 N.m) LXM32.D30N4 10 A, 400 V, three phase 222.15 lbf.in (25.1 N.m) LXM32.D30N4 10 A, 480 V, three phase
Nominal Output Power	2700 W LXM32.D30N4 10 A, 400 V, three phase 2700 W LXM32.D30N4 10 A, 480 V, three phase
Nominal Torque	54.87 lbf.in (6.2 N.m) LXM32.D30N4 10 A, 400 V, three phase 54.87 lbf.in (6.2 N.m) LXM32.D30N4 10 A, 480 V, three phase
Nominal Speed	4000 rpm LXM32.D30N4 10 A, 400 V, three phase 4000 rpm LXM32.D30N4 10 A, 480 V, three phase
Product Compatibility	LXM32.D30N4 400...480 V three phase
Shaft End	Keyed
Ip Degree Of Protection	IP54 standard
Speed Feedback Resolution	32768 points/turn x 4096 turns
Holding Brake	With
Mounting Support	International standard flange
Electrical Connection	Rotatable right-angled connectors

Complementary

Range Compatibility	Lexium 32
[Us] Rated Supply Voltage	480 V
Phase	Three phase
Continuous Stall Current	7.69 A
Continuous Power	3.3 W
Maximum Current Irms	29.1 A LXM32.D30N4
Maximum Permanent Current	29.1 A
Second Shaft	Without second shaft end
Shaft Diameter	0.75 in (19 mm)
Shaft Length	1.57 in (40 mm)

Price is “List Price” and may be subject to a trade discount – check with your local distributor or retailer for actual price.

Disclaimer: This documentation is not intended as a substitute for and is not to be used for determining suitability or reliability of these products for specific user applications

Key Width	1.18 in (30 mm)
Feedback Type	Multiturn SinCos Hiperface
Holding Torque	79.66 lbf.in (9 N.m) holding brake
Motor Flange Size	3.94 in (100 mm)
Number Of Motor Stacks	3
Torque Constant	1 N.m/A 248 °F (120 °C)
Back Emf Constant	63.5 V/krpm 248 °F (120 °C)
Number Of Motor Poles	10
Rotor Inertia	10.3 kg.cm²
Stator Resistance	0.63 Ohm 68 °F (20 °C)
Stator Inductance	4 mH 68 °F (20 °C)
Stator Electrical Time Constant	6.3 ms 68 °F (20 °C)
Maximum Radial Force Fr	1050 N 1000 rpm 830 N 2000 rpm 730 N 3000 rpm 660 N 4000 rpm 610 N 5000 rpm
Maximum Axial Force Fa	0.2 x Fr
Brake Pull-In Power	18 W
Type Of Cooling	Natural convection
Length	9.22 in (234.3 mm)
Centring Collar Diameter	3.74 in (95 mm)
Centring Collar Depth	0.14 in (3.5 mm)
Number Of Mounting Holes	4
Mounting Holes Diameter	0.35 in (9 mm)
Circle Diameter Of The Mounting Holes	4.53 in (115 mm)
Net Weight	17.97 lb(US) (8.15 kg)

Ordering and shipping details

Category	US1PC5318282
Discount Schedule	PC53
Gtin	3606485196794
Returnability	Yes
Country Of Origin	DE

Packing Units

Unit Type Of Package 1	PCE
Number Of Units In Package 1	1
Package 1 Height	7.68 in (19.500 cm)
Package 1 Width	8.66 in (22.000 cm)
Package 1 Length	15.55 in (39.500 cm)
Package 1 Weight	19.00 lb(US) (8.620 kg)
Unit Type Of Package 2	S04

Number Of Units In Package 2	2
Package 2 Height	11.81 in (30 cm)
Package 2 Width	15.75 in (40 cm)
Package 2 Length	23.62 in (60 cm)
Package 2 Weight	39.44 lb(US) (17.890 kg)
Unit Type Of Package 3	P06
Number Of Units In Package 3	8
Package 3 Height	29.53 in (75.000 cm)
Package 3 Width	31.50 in (80.000 cm)
Package 3 Length	23.62 in (60.000 cm)
Package 3 Weight	175.40 lb(US) (79.560 kg)

Contractual warranty

Warranty	18 months

Sustainability

Green Premium™ label is Schneider Electric's commitment to delivering products with best-in-class environmental performance. Green Premium promises compliance with the latest regulations, transparency on environmental impacts, as well as circular and low-CO_2 products.

Guide to assessing product sustainability is a white paper that clarifies global eco-label standards and how to interpret environmental declarations.

Learn more about Green Premium >

Guide to assess a product's sustainability >

Transparency RoHS/REACh

Well-being performance

Mercury Free	
Rohs Exemption Information	Yes
Pvc Free	

Certifications & Standards

Reach Regulation	REACh Declaration
Eu Rohs Directive	Pro-active compliance (Product out of EU RoHS legal scope)
China Rohs Regulation	China RoHS declaration
Environmental Disclosure	Product Environmental Profile
Weee	The product must be disposed on European Union markets following specific waste collection and never end up in rubbish bins.
Circularity Profile	No need of specific recycling operations
California Proposition 65	WARNING: This product can expose you to chemicals including: Lead and lead compounds, which is known to the State of California to cause cancer and birth defects or other reproductive harm. For more information go to www.P65Warnings.ca.gov

Dimensions Drawings

Servo Motors Dimensions

Example with Straight Connectors

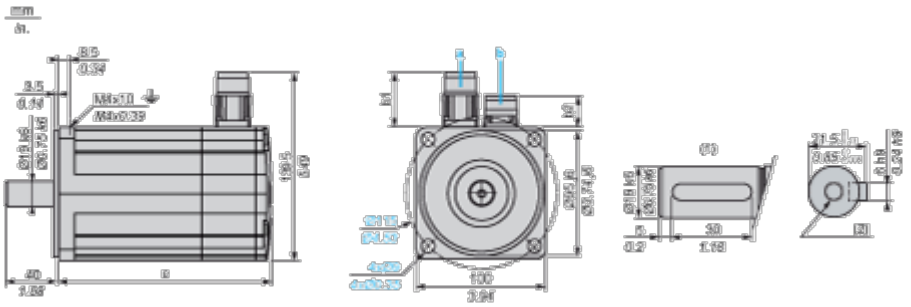

a: Power supply for servo motor brake

b: Power supply for servo motor encoder

(1) Shaft end, keyed slot (optional)

(2) For screw M6 x 21 mm/M6 x 0.83 in.

Dimensions in mm

Straight connectors		Rotatable angled connectors		c (without brake)	c (with brake)
b1	b2	b1	b2		
39.5	25.5	39.5	39.5	192	234

Dimensions in in.

Straight connectors		Rotatable angled connectors		c (without brake)	c (with brake)
b1	b2	b1	b2		
1.55	1.00	1.55	1.55	7.55	9.21

Performance Curves

400 V 3-Phase Supply Voltage

Torque/Speed Curves

Servo motor with LXM32•D30N4 servo drive

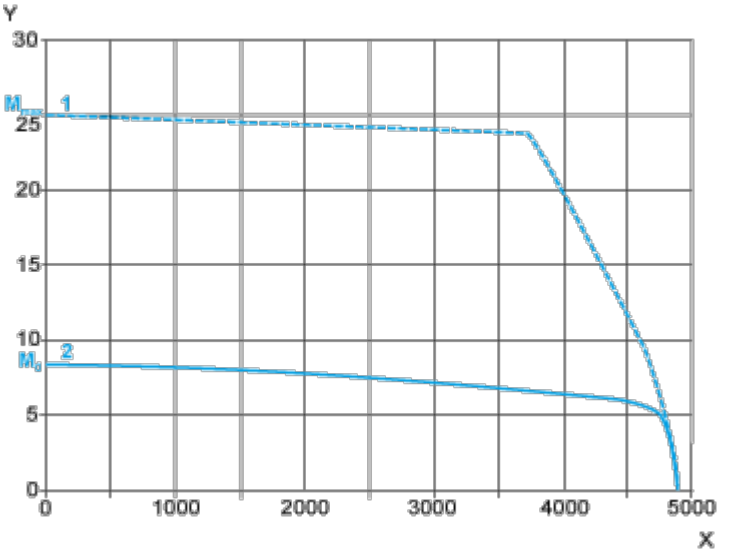

X Speed in rpm

Y Torque in Nm

1 Peak torque

2 Continuous torque

480 V 3-Phase Supply Voltage

Torque/Speed Curves

Servo motor with LXM32•D30N4 servo drive

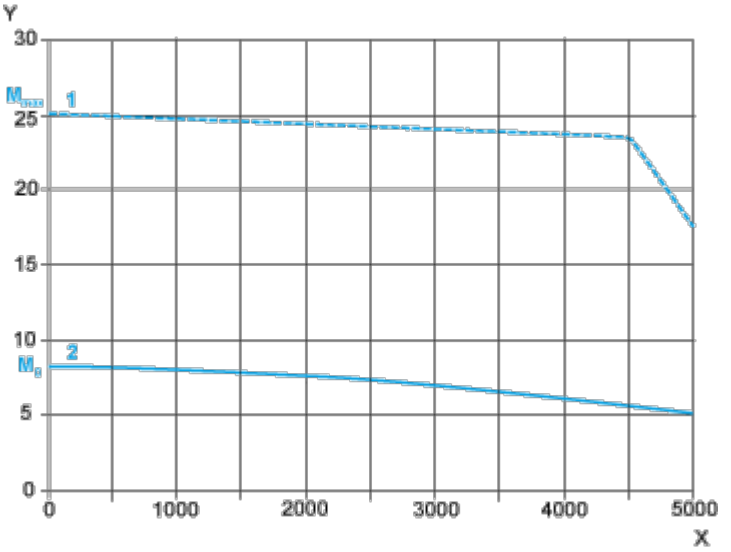

X Speed in rpm

Y Torque in Nm

1 Peak torque

2 Continuous torque