# Product data sheet

Specifications

Green Premium™

## servo motor BMI 1-phase - untapped IP54 single turn - 131072 p/t - brake

BMI0703T01F

Discontinued on: Oct 9, 2023

Discontinued

**Product availability: Non-Stock - Not normally stocked in distribution facility**

## Main

| | |
|---|---|
| **Range Compatibility** | Lexium 32i |
| **Product Or Component Type** | Servo motor with power stage |
| **Device Short Name** | BMI |

## Complementary

| | |
|---|---|
| **Maximum Mechanical Speed** | 8000 rpm |
| **[Us] Rated Supply Voltage** | 115...230 V - 15...10 % |
| **Supply Voltage Limits** | 100…240 V |
| **Phase** | Single phase |
| **Supply Frequency** | 50/60 Hz - 5...5 % |
| **Network Frequency Limits** | 47.5…63 Hz |
| **Emc Filter** | Integrated |
| **Continuous Output Current** | 3.5 A 8 kHz |
| **Output Current 3S Peak** | 10.5 A 230 V 3 s |
| **Continuous Stall Current** | 3.5 A |
| **Continuous Stall Torque** | 30.09 lbf.in (3.4 N.m) 115...230 V single phase |
| **Peak Stall Torque** | 76.12 lbf.in (8.6 N.m) 115 V single phase<br>76.12 lbf.in (8.6 N.m) 230 V single phase |
| **Nominal Output Power** | 700 W 230 V single phase<br>400 W 115 V single phase |
| **Nominal Torque** | 25.67 lbf.in (2.9 N.m) 115 V single phase<br>19.47 lbf.in (2.2 N.m) 230 V single phase |
| **Nominal Speed** | 3200 rpm 230 V single phase<br>1400 rpm 115 V single phase |
| **Maximum Current Irms** | 17.8 A 115 V, single phase<br>17.8 A 230 V, single phase |
| **Product Compatibility** | Drive control unit LXM32i CANopen<br>Drive control unit LXM32i EtherCAT |
| **Shaft End** | Untapped |
| **Second Shaft** | Without second shaft end |
| **Shaft Diameter** | 0.55 in (14 mm) |
| **Shaft Length** | 1.18 in (30 mm) |

Price is “List Price” and may be subject to a trade discount – check with your local distributor or retailer for actual price.

Disclaimer: This documentation is not intended as a substitute for and is not to be used for determining suitability or reliability of these products for specific user applications

| | |
|---|---|
| **Feedback Type** | Absolute single turn SinCos Hiperface |
| **Speed Feedback Resolution** | 131072 points/turn |
| **Holding Brake** | With |
| **Holding Torque** | 26.55 lbf.in (3 N.m) holding brake |
| **Mounting Support** | International standard flange |
| **Motor Flange Size** | 2.76 in (70 mm) |
| **Electrical Connection** | Printed circuit board connector |
| **Torque Constant** | 0.81 N.m/A 68 °F (20 °C) |
| **Back Emf Constant** | 54.44 V/krpm 68 °F (20 °C) |
| **Number Of Motor Poles** | 10 |
| **Rotor Inertia** | 1.78 kg.cm² |
| **Stator Resistance** | 2.58 Ohm 68 °F (20 °C) |
| **Stator Inductance** | 2.28 mH 68 °F (20 °C) |
| **Stator Electrical Time Constant** | 0.88 ms 68 °F (20 °C) |
| **Maximum Radial Force Fr** | 730 N 1000 rpm<br>580 N 2000 rpm<br>510 N 3000 rpm<br>460 N 4000 rpm<br>430 N 5000 rpm<br>400 N 6000 rpm |
| **Maximum Axial Force Fa** | 0.2 x Fr |
| **Brake Pull-In Power** | 5 W |
| **Type Of Cooling** | Natural convection |
| **Length** | 13.35 in (339 mm) |
| **Number Of Motor Stacks** | 3 |
| **Centring Collar Diameter** | 2.36 in (60 mm) |
| **Centring Collar Depth** | 0.10 in (2.5 mm) |
| **Number Of Mounting Holes** | 4 |
| **Mounting Holes Diameter** | 0.22 in (5.5 mm) |
| **Circle Diameter Of The Mounting Holes** | 2.95…3.23 in (75…82 mm) |
| **Distance Shaft Shoulder-Flange** | 0.10 in (2.5 mm) |

## Environment

| | |
|---|---|
| **Ip Degree Of Protection** | Shaft IP54<br>Housing IP65 |

## Ordering and shipping details

| | |
|---|---|
| **Category** | US1PC5618287 |
| **Discount Schedule** | PC56 |
| **Gtin** | 3606485376615 |
| **Returnability** | No |
| **Country Of Origin** | DE |

## Packing Units

| | |
|---|---|
| **Unit Type Of Package 1** | PCE |
| **Number Of Units In Package 1** | 1 |
| **Package 1 Height** | 9.84 in (25.0 cm) |
| **Package 1 Width** | 7.32 in (18.6 cm) |
| **Package 1 Length** | 21.65 in (55.0 cm) |
| **Package 1 Weight** | 14.33 lb(US) (6.5 kg) |

## Contractual warranty

| | |
|---|---|
| **Warranty** | 18 months |

## Sustainability

**Green Premium™ label** is Schneider Electric's commitment to delivering products with best-in-class environmental performance. Green Premium promises compliance with the latest regulations, transparency on environmental impacts, as well as circular and low-$CO_2$ products.

**Guide to assessing product sustainability** is a white paper that clarifies global eco-label standards and how to interpret environmental declarations.

Learn more about Green Premium >

Guide to assess a product's sustainability >

Transparency RoHS/REACh

## Well-being performance

| | |
|---|---|
| Mercury Free | |
| Rohs Exemption Information | Yes |
| Pvc Free | |

## Certifications & Standards

| | |
|---|---|
| **Reach Regulation** | REACh Declaration |
| **Eu Rohs Directive** | Pro-active compliance (Product out of EU RoHS legal scope) |
| **China Rohs Regulation** | China RoHS declaration |
| **Environmental Disclosure** | Product Environmental Profile |
| **Weee** | The product must be disposed on European Union markets following specific waste collection and never end up in rubbish bins. |
| **Circularity Profile** | End of Life Information |
| **California Proposition 65** | WARNING: This product can expose you to chemicals including: Lead and lead compounds, which is known to the State of California to cause cancer and birth defects or other reproductive harm. For more information go to www.P65Warnings.ca.gov |

# Dimensions Drawings

## External Dimensions

### With Standard Braking Resistor

**Mounting type A**

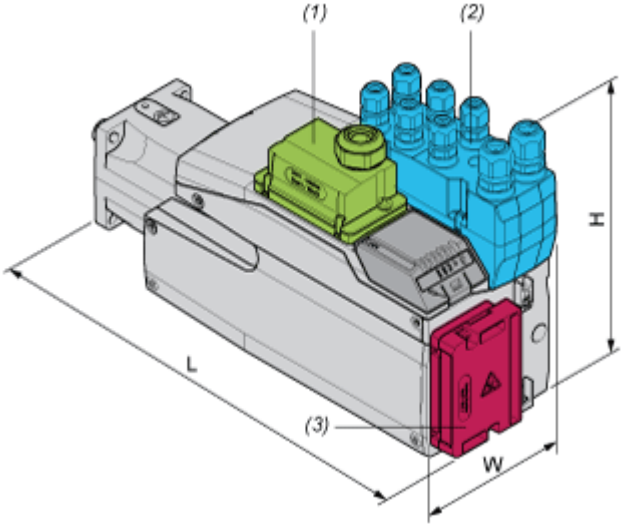


(1) Module for supply voltage

(2) I/O module

(3) Standard braking resistor

Dimensions in mm

| W | H | L |
|---|---|---|
| 99 | 187 | 360 |

Dimensions in in.

| W | H | L |
|---|---|---|
| 3,90 | 7,36 | 14,17 |

**Mounting type B**

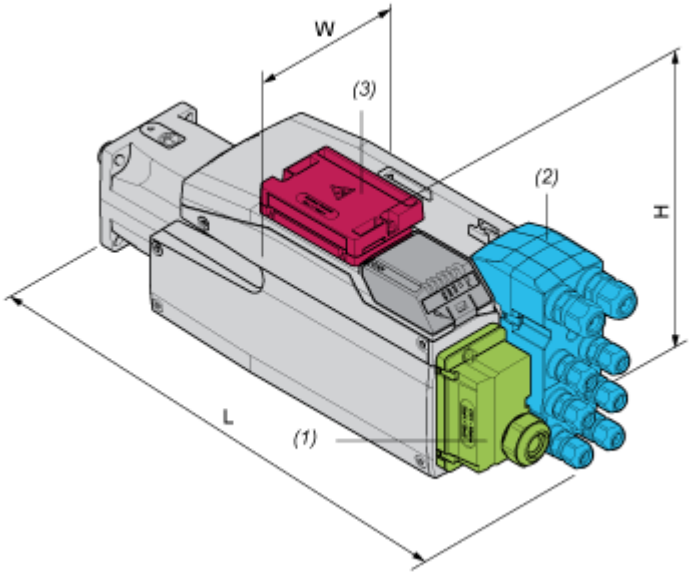


(1) Module for supply voltage

(2) I/O module

(3) Standard braking resistor

Dimensions in mm

| W | H | L |
|---|---|---|
| 99 | 138,5 | 409 |

Dimensions in in.

| W | H | L |
|---|---|---|
| 3,90 | 5,45 | 16,1 |

### With External Braking Resistor

**Mounting type C**

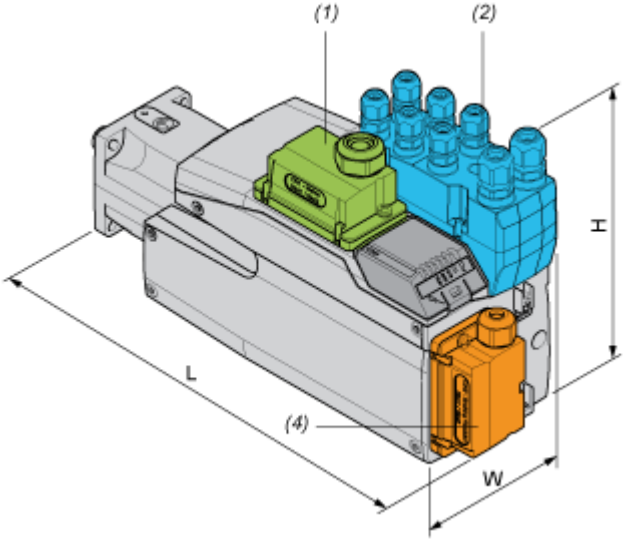


(1) Module for supply voltage

(2) I/O module

(4) External braking resistor

Dimensions in mm

| W | H | L |
|---|---|---|
| 99 | 187 | 372 |

Dimensions in in.

| W | H | L |
|---|---|---|
| 3,90 | 7,36 | 14,65 |

**Mounting type D**

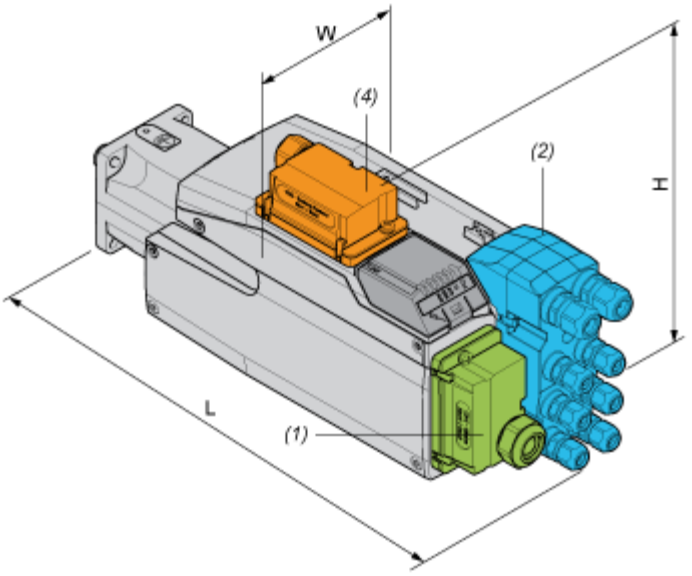


(1) Module for supply voltage

(2) I/O module

(4) External braking resistor

Dimensions in mm

| W | H | L |
|---|---|---|
| 99 | 160 | 409 |

Dimensions in in.

| W | H | L |
|---|---|---|
| 3,90 | 6,3 | 16,1 |

**Mounting type E**

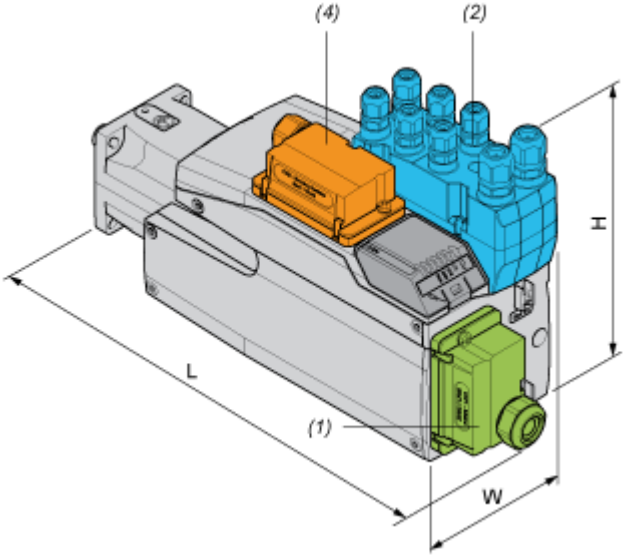


(1) Module for supply voltage

(2) I/O module

(4) External braking resistor

Dimensions in mm

| W | H | L |
|---|---|---|
| 99 | 187 | 399 |

Dimensions in in.

| W | H | L |
|---|---|---|
| 3,90 | 7,36 | 15,71 |

**Mounting type F**

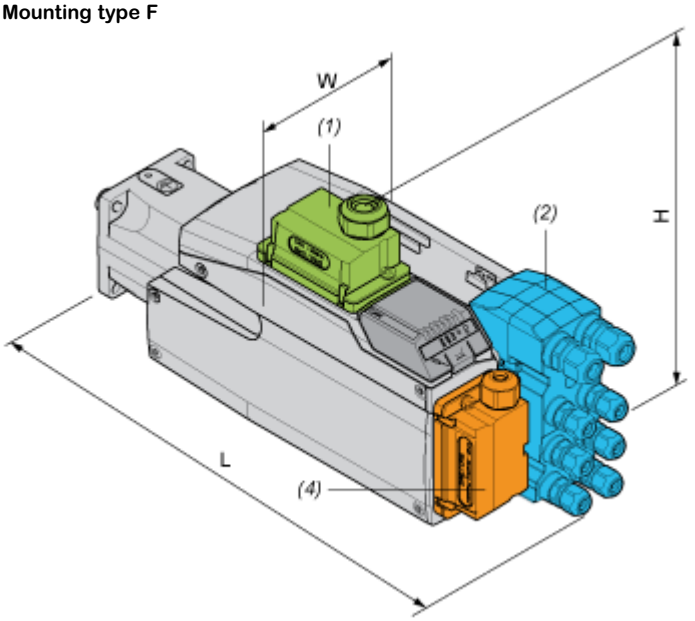


(1) Module for supply voltage

(2) I/O module

(4) External braking resistor

Dimensions in mm

| W | H | L |
|---|---|---|
| 99 | 180 | 409 |

Dimensions in in.

| W | H | L |
|---|---|---|
| 3,90 | 7,09 | 16,1 |

# Performance Curves

## Performance Curves

### Torque/Speed Curves with 115 V Single Phase Supply Voltage

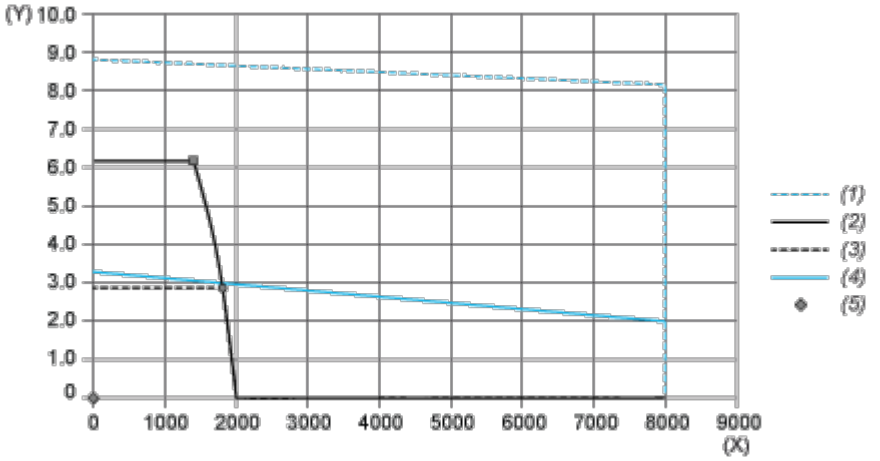


(X) Speed (rpm)

(Y) Torque (N.m)

(1) Motor peak

(2) Drive peak

(3) Drive cont

(4) Motor cont

(5) Operating point

| | | Power | At Speed | With Torque |
|---|---|---|---|---|
| max. Peak Power | ■ | 889 W | 1360 rpm | 6.24 N.m |
| max Cont. Power (Drive) | ● | 501 W | 1680 rpm | 2.85 N.m |

## Performance Curves

### Torque/Speed Curves with 230 V Single Phase Supply Voltage

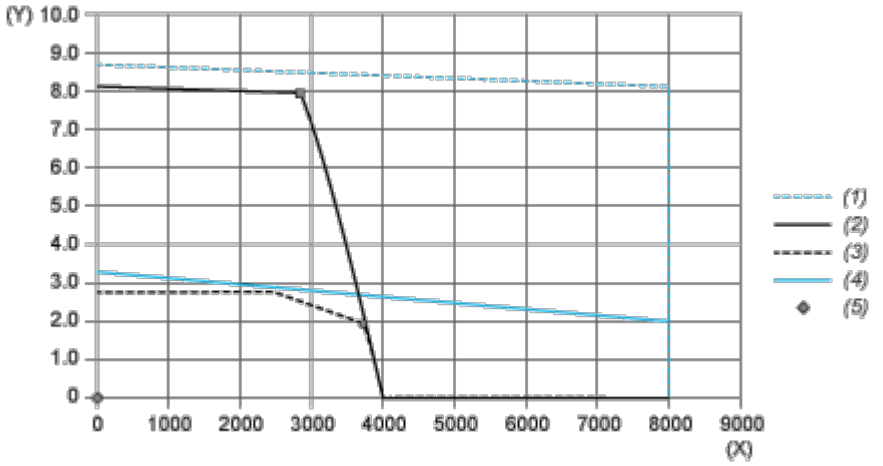


(X) Speed (rpm)

(Y) Torque (N.m)

(1) Motor peak

(2) Drive peak

(3) Drive cont

(4) Motor cont

(5) Operating point

| | | Power | At Speed | With Torque |
|---|---|---|---|---|
| max. Peak Power | ■ | 2314 W | 2800 rpm | 7.89 N.m |
| max Cont. Power (Drive) | ● | 738 W | 3600 rpm | 1.96 N.m |