# Product data sheet

Specifications

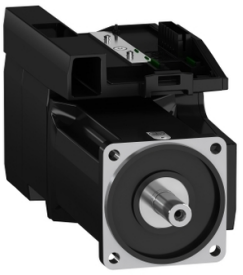

## servo motor BMI 3-phase - untapped IP54 multiturn - 131072 p/t x 4096 t - brake

BMI1003P02F

**Product availability: Non-Stock - Not normally stocked in distribution facility**

**Price*: 2,645.17 USD**

## Main

| | |
|---|---|
| **Range Compatibility** | Lexium 32i |
| **Product Or Component Type** | Servo motor with power stage |
| **Device Short Name** | BMI |

## Complementary

| | |
|---|---|
| **Maximum Mechanical Speed** | 6000 rpm |
| **[Us] Rated Supply Voltage** | 208...480 V - 15...10 % |
| **Supply Voltage Limits** | 208…480 V |
| **Phase** | Three phase |
| **Supply Frequency** | 50/60 Hz - 5...5 % |
| **Network Frequency Limits** | 47.5…63 Hz |
| **Emc Filter** | Integrated |
| **Continuous Output Current** | 4 A 8 kHz |
| **Output Current 3S Peak** | 12 A 400 V 3 s |
| **Continuous Stall Current** | 4 A |
| **Continuous Stall Torque** | 75.23 lbf.in (8.5 N.m) 208...480 V three phase |
| **Peak Stall Torque** | 169.93 lbf.in (19.2 N.m) 400 V three phase<br>169.93 lbf.in (19.2 N.m) 480 V three phase<br>169.93 lbf.in (19.2 N.m) 208 V three phase |
| **Nominal Output Power** | 1000 W 208 V three phase<br>2000 W 400 V three phase<br>2100 W 480 V three phase |
| **Nominal Torque** | 63.73 lbf.in (7.2 N.m) 208 V three phase<br>60.18 lbf.in (6.8 N.m) 400 V three phase<br>49.56 lbf.in (5.6 N.m) 480 V three phase |
| **Nominal Speed** | 1500 rpm 208 V three phase<br>3000 rpm 400 V three phase<br>3700 rpm 480 V three phase |
| **Maximum Current Irms** | 26.7 A 208 V, three phase<br>26.7 A 400 V, three phase<br>26.7 A 480 V, three phase |
| **Product Compatibility** | Drive control unit LXM32i CANopen<br>Drive control unit LXM32i EtherCAT |
| **Shaft End** | Untapped |
| **Second Shaft** | Without second shaft end |

Price is “List Price” and may be subject to a trade discount – check with your local distributor or retailer for actual price.

Disclaimer: This documentation is not intended as a substitute for and is not to be used for determining suitability or reliability of these products for specific user applications

| | |
|---|---|
| **Shaft Diameter** | 0.75 in (19 mm) |
| **Shaft Length** | 1.57 in (40 mm) |
| **Feedback Type** | Absolute multiturn SinCos Hiperface |
| **Speed Feedback Resolution** | 131072 points/turn x 4096 turns |
| **Holding Brake** | With |
| **Holding Torque** | 79.66 lbf.in (9 N.m) holding brake |
| **Mounting Support** | International standard flange |
| **Motor Flange Size** | 3.94 in (100 mm) |
| **Electrical Connection** | Printed circuit board connector |
| **Torque Constant** | 1.7 N.m/A 68 °F (20 °C) |
| **Back Emf Constant** | 112 V/krpm 68 °F (20 °C) |
| **Number Of Motor Poles** | 10 |
| **Rotor Inertia** | 10.3 kg.cm² |
| **Stator Resistance** | 2.31 Ohm 68 °F (20 °C) |
| **Stator Inductance** | 11.43 mH 68 °F (20 °C) |
| **Stator Electrical Time Constant** | 4.95 ms 68 °F (20 °C) |
| **Maximum Radial Force Fr** | 1050 N 1000 rpm<br>830 N 2000 rpm<br>730 N 3000 rpm<br>660 N 4000 rpm<br>610 N 5000 rpm |
| **Maximum Axial Force Fa** | 0.2 x Fr |
| **Brake Pull-In Power** | 8 W |
| **Type Of Cooling** | Natural convection |
| **Length** | 13.31 in (338 mm) |
| **Number Of Motor Stacks** | 3 |
| **Centring Collar Diameter** | 3.74 in (95 mm) |
| **Centring Collar Depth** | 0.14 in (3.5 mm) |
| **Number Of Mounting Holes** | 4 |
| **Mounting Holes Diameter** | 0.35 in (9 mm) |
| **Circle Diameter Of The Mounting Holes** | 4.53 in (115 mm) |
| **Distance Shaft Shoulder-Flange** | 0.14 in (3.5 mm) |

## Environment

| | |
|---|---|
| **Ip Degree Of Protection** | Shaft IP54<br>Housing IP65 |

## Ordering and shipping details

| | |
|---|---|
| **Category** | US1PC5618287 |
| **Discount Schedule** | PC56 |
| **Gtin** | 3606485377599 |
| **Returnability** | No |
| **Country Of Origin** | DE |

## Packing Units

| | |
|---|---|
| **Unit Type Of Package 1** | PCE |
| **Number Of Units In Package 1** | 1 |
| **Package 1 Height** | 9.84 in (25.0 cm) |
| **Package 1 Width** | 7.32 in (18.6 cm) |
| **Package 1 Length** | 21.65 in (55.0 cm) |
| **Package 1 Weight** | 24.25 lb(US) (11.0 kg) |

## Contractual warranty

| | |
|---|---|
| **Warranty** | 18 months |

## Sustainability

**Green Premium™ label** is Schneider Electric's commitment to delivering products with best-in-class environmental performance. Green Premium promises compliance with the latest regulations, transparency on environmental impacts, as well as circular and low-$CO_2$ products.

**Guide to assessing product sustainability** is a white paper that clarifies global eco-label standards and how to interpret environmental declarations.

Learn more about Green Premium >

Guide to assess a product's sustainability >

Transparency RoHS/REACh

## Well-being performance

| | |
|---|---|
| Mercury Free | |
| Rohs Exemption Information | Yes |
| Pvc Free | |

## Certifications & Standards

| | |
|---|---|
| **Reach Regulation** | REACh Declaration |
| **Eu Rohs Directive** | Pro-active compliance (Product out of EU RoHS legal scope) |
| **China Rohs Regulation** | China RoHS declaration |
| **Environmental Disclosure** | Product Environmental Profile |
| **Weee** | The product must be disposed on European Union markets following specific waste collection and never end up in rubbish bins. |
| **Circularity Profile** | End of Life Information |
| **California Proposition 65** | WARNING: This product can expose you to chemicals including: Lead and lead compounds, which is known to the State of California to cause cancer and birth defects or other reproductive harm. For more information go to www.P65Warnings.ca.gov |

# Dimensions Drawings

## External Dimensions

### With Standard Braking Resistor

**Mounting type A**

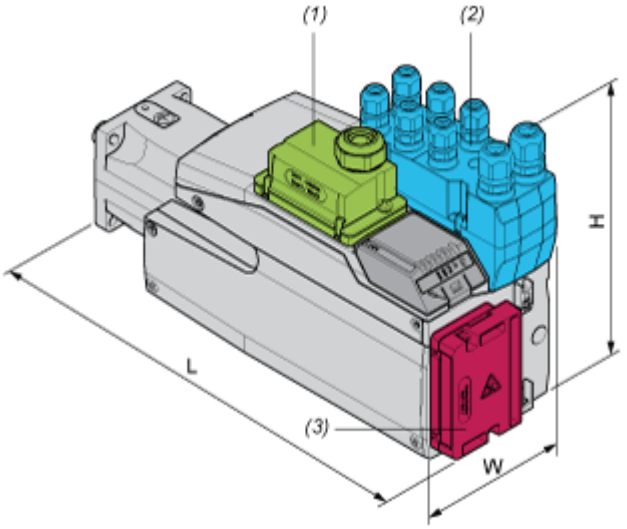


(1) Module for supply voltage

(2) I/O module

(3) Standard braking resistor

Dimensions in mm

| W | H | L |
|---|---|---|
| 132,6 | 217 | 367 |

Dimensions in in.

| W | H | L |
|---|---|---|
| 5,22 | 8,54 | 14,45 |

**Mounting type B**

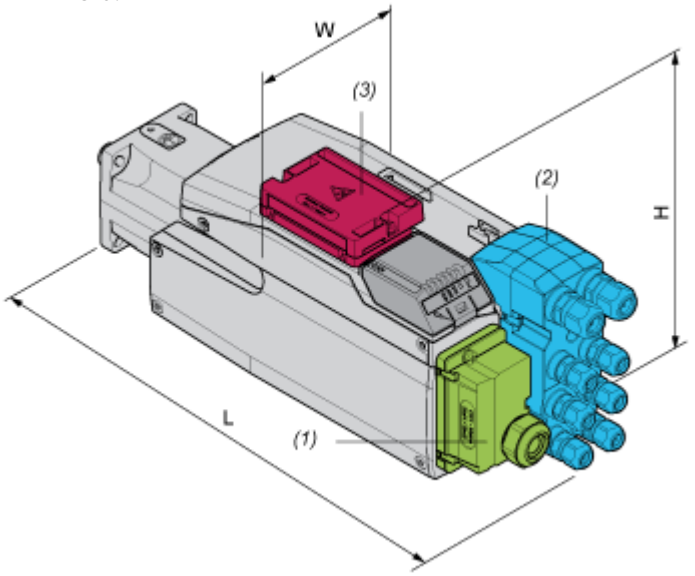


(1) Module for supply voltage

(2) I/O module

(3) Standard braking resistor

Dimensions in mm

| W | H | L |
|---|---|---|
| 132,6 | 168 | 416 |

Dimensions in in.

| W | H | L |
|---|---|---|
| 5,22 | 6,61 | 16,38 |

### With External Braking Resistor

**Mounting type C**

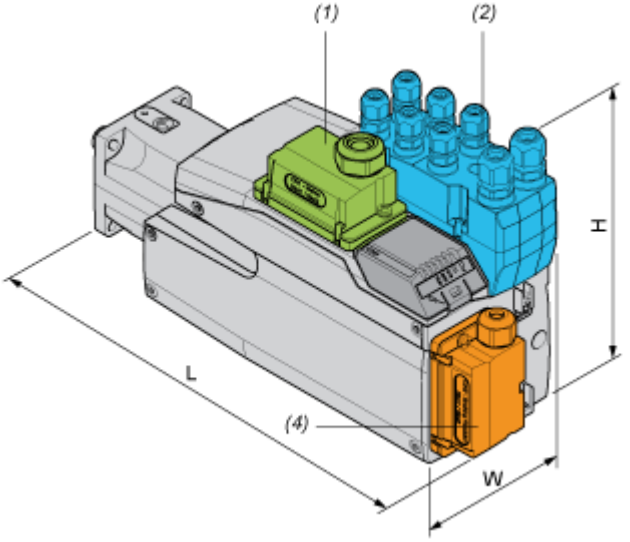


(1) Module for supply voltage

(2) I/O module

(4) External braking resistor

Dimensions in mm

| W | H | L |
|---|---|---|
| 132,6 | 217 | 379 |

Dimensions in in.

| W | H | L |
|---|---|---|
| 5,22 | 8,54 | 14,92 |

**Mounting type D**

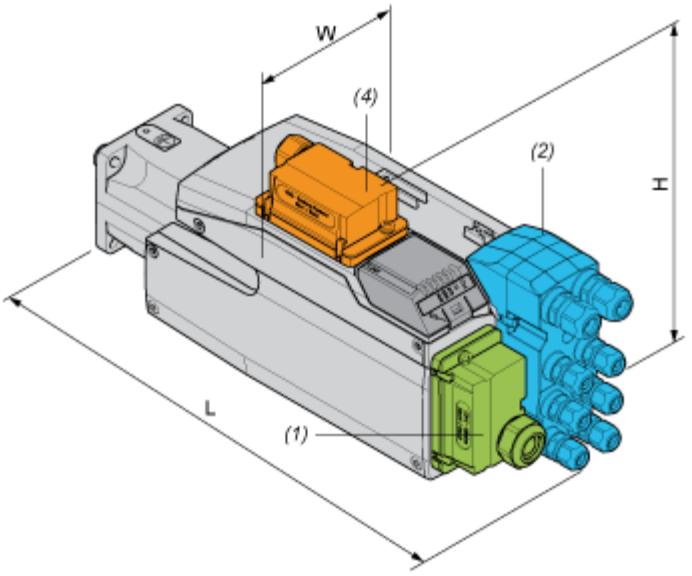


(1) Module for supply voltage

(2) I/O module

(4) External braking resistor

Dimensions in mm

| W | H | L |
|---|---|---|
| 132,6 | 180 | 416 |

Dimensions in in.

| W | H | L |
|---|---|---|
| 5,22 | 7,09 | 16,38 |

**Mounting type E**

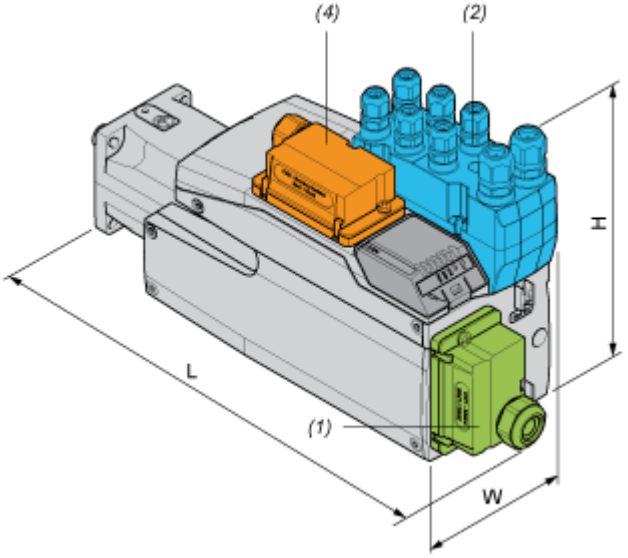


(1) Module for supply voltage

(2) I/O module

(4) External braking resistor

Dimensions in mm

| W | H | L |
|---|---|---|
| 132,6 | 217 | 406 |

Dimensions in in.

| W | H | L |
|---|---|---|
| 5,22 | 8,54 | 15,98 |

**Mounting type F**

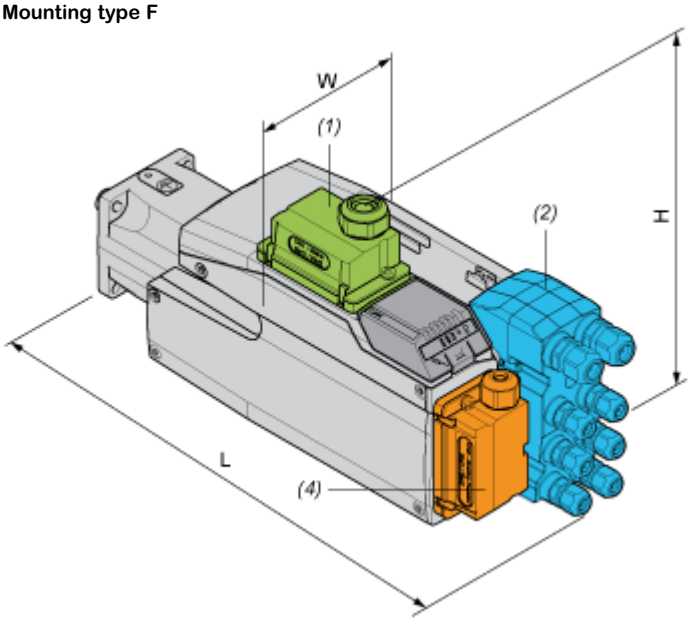


(1) Module for supply voltage

(2) I/O module

(4) External braking resistor

Dimensions in mm

| W | H | L |
|---|---|---|
| 132,6 | 206,5 | 416 |

Dimensions in in.

| W | H | L |
|---|---|---|
| 5,22 | 8,13 | 16,38 |

Performance Curves

## Performance Curves

### Torque/Speed Curves with 208 V Three Phases Supply Voltage

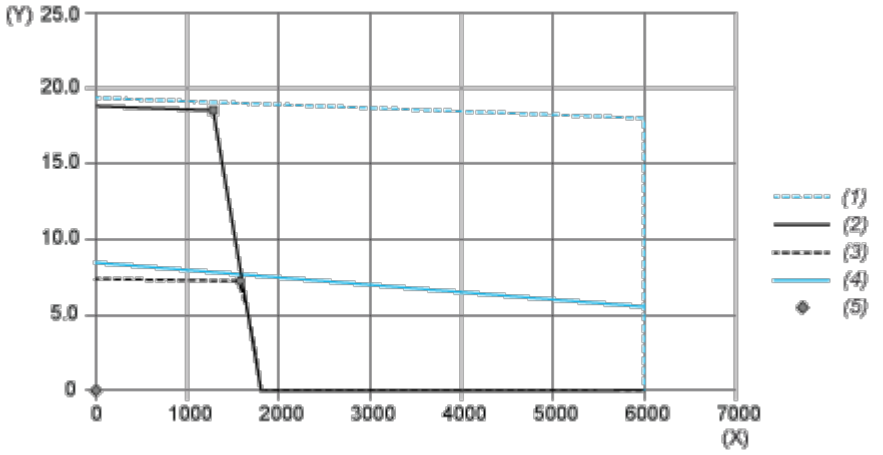


(X) Speed (rpm)

(Y) Torque (N.m)

(1) Motor peak

(2) Drive peak

(3) Drive cont

(4) Motor cont

(5) Operating point

| | | Power | At Speed | With Torque |
|---|---|---|---|---|
| max. Peak Power | ■ | 2675 W | 1380 rpm | 18.51 N.m |
| max Cont. Power (Drive) | ● | 1223 W | 1620 rpm | 7.21 N.m |

## Performance Curves

### Torque/Speed Curves with 400 V Three Phases Supply Voltage

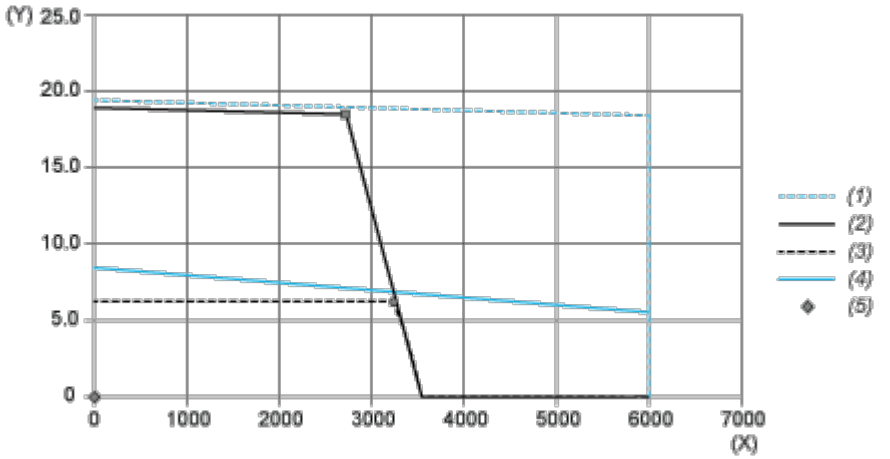


(X) Speed (rpm)

(Y) Torque (N.m)

(1) Motor peak

(2) Drive peak

(3) Drive cont

(4) Motor cont

(5) Operating point

| | | Power | At Speed | With Torque |
|---|---|---|---|---|
| max. Peak Power | ■ | 5328 W | 2760 rpm | 18.44 N.m |
| max Cont. Power (Drive) | ● | 2096 W | 3240 rpm | 6.18 N.m |

## Performance Curves

### Torque/Speed Curves with 480 V Three Phases Supply Voltage

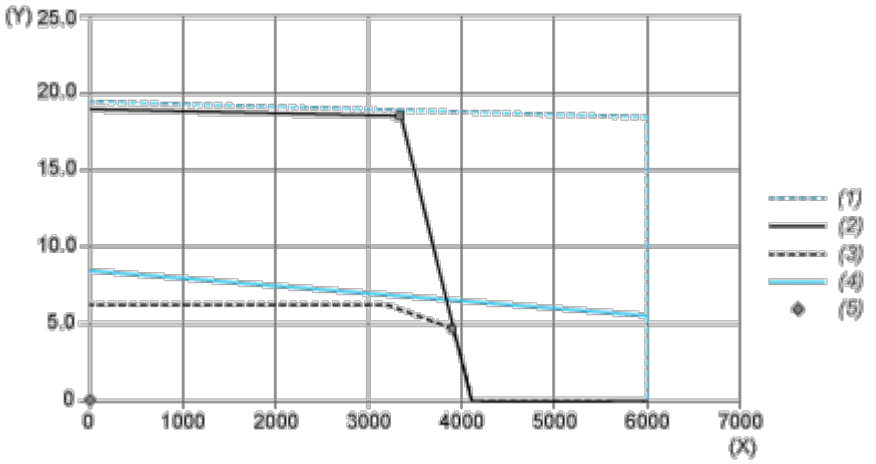


(X) Speed (rpm)

(Y) Torque (N.m)

(1) Motor peak

(2) Drive peak

(3) Drive cont

(4) Motor cont

(5) Operating point

| | | Power | At Speed | With Torque |
|---|---|---|---|---|
| max. Peak Power | ■ | 6454 W | 3360 rpm | 18.34 N.m |
| max Cont. Power (Drive) | ● | 1994 W | 3960 rpm | 4.81 N.m |