Product data sheet

Specifications

Green Premium™

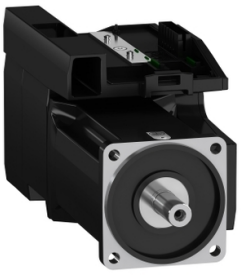

servo motor BMI 3-phase - untapped IP65 single turn - 32768 p/t

BMI1003P26A

Discontinued on: Oct 9, 2023

Discontinued

Product availability: Non-Stock - Not normally stocked in distribution facility

Main

Range Compatibility	Lexium 32i
Product Or Component Type	Servo motor with power stage
Device Short Name	BMI

Complementary

Maximum Mechanical Speed	6000 rpm
[Us] Rated Supply Voltage	208...480 V - 15...10 %
Supply Voltage Limits	208…480 V
Phase	Three phase
Supply Frequency	50/60 Hz - 5...5 %
Network Frequency Limits	47.5…63 Hz
Emc Filter	Integrated
Continuous Output Current	4 A 8 kHz
Output Current 3S Peak	12 A 400 V 3 s
Continuous Stall Current	4 A
Continuous Stall Torque	75.23 lbf.in (8.5 N.m) 208...480 V three phase
Peak Stall Torque	169.93 lbf.in (19.2 N.m) 400 V three phase 169.93 lbf.in (19.2 N.m) 480 V three phase 169.93 lbf.in (19.2 N.m) 208 V three phase
Nominal Output Power	1000 W 208 V three phase 2000 W 400 V three phase 2100 W 480 V three phase
Nominal Torque	63.73 lbf.in (7.2 N.m) 208 V three phase 60.18 lbf.in (6.8 N.m) 400 V three phase 49.56 lbf.in (5.6 N.m) 480 V three phase
Nominal Speed	1500 rpm 208 V three phase 3000 rpm 400 V three phase 3700 rpm 480 V three phase
Maximum Current Irms	26.7 A 208 V, three phase 26.7 A 400 V, three phase 26.7 A 480 V, three phase
Product Compatibility	Drive control unit LXM32i CANopen Drive control unit LXM32i EtherCAT
Shaft End	Untapped
Second Shaft	Without second shaft end

Price is “List Price” and may be subject to a trade discount – check with your local distributor or retailer for actual price.

Disclaimer: This documentation is not intended as a substitute for and is not to be used for determining suitability or reliability of these products for specific user applications

Shaft Diameter	0.75 in (19 mm)
Shaft Length	1.57 in (40 mm)
Feedback Type	Absolute single turn SinCos Hiperface
Speed Feedback Resolution	32768 points/turn
Holding Brake	Without
Mounting Support	International standard flange
Motor Flange Size	3.94 in (100 mm)
Electrical Connection	Printed circuit board connector
Torque Constant	1.7 N.m/A 68 °F (20 °C)
Back Emf Constant	112 V/krpm 68 °F (20 °C)
Number Of Motor Poles	10
Rotor Inertia	9.37 kg.cm²
Stator Resistance	2.31 Ohm 68 °F (20 °C)
Stator Inductance	11.43 mH 68 °F (20 °C)
Stator Electrical Time Constant	4.95 ms 68 °F (20 °C)
Maximum Radial Force Fr	1050 N 1000 rpm 830 N 2000 rpm 730 N 3000 rpm 660 N 4000 rpm 610 N 5000 rpm
Maximum Axial Force Fa	0.2 x Fr
Type Of Cooling	Natural convection
Length	11.77 in (299 mm)
Number Of Motor Stacks	3
Centring Collar Diameter	3.74 in (95 mm)
Centring Collar Depth	0.14 in (3.5 mm)
Number Of Mounting Holes	4
Mounting Holes Diameter	0.35 in (9 mm)
Circle Diameter Of The Mounting Holes	4.53 in (115 mm)
Distance Shaft Shoulder-Flange	0.14 in (3.5 mm)

Environment

Ip Degree Of Protection	IP65

Ordering and shipping details

Category	US1PC5618287
Discount Schedule	PC56
Gtin	3606485377766
Returnability	No
Country Of Origin	DE

Packing Units

Unit Type Of Package 1	PCE

Number Of Units In Package 1	1
Package 1 Height	9.84 in (25.0 cm)
Package 1 Width	7.32 in (18.6 cm)
Package 1 Length	21.65 in (55.0 cm)
Package 1 Weight	24.25 lb(US) (11.0 kg)

Contractual warranty

Warranty	18 months

Sustainability

Green Premium™ label is Schneider Electric's commitment to delivering products with best-in-class environmental performance. Green Premium promises compliance with the latest regulations, transparency on environmental impacts, as well as circular and low-CO_2 products.

Guide to assessing product sustainability is a white paper that clarifies global eco-label standards and how to interpret environmental declarations.

Learn more about Green Premium >

Guide to assess a product's sustainability >

Transparency RoHS/REACh

Well-being performance

Mercury Free	
Rohs Exemption Information	Yes
Pvc Free	

Certifications & Standards

Reach Regulation	REACh Declaration
Eu Rohs Directive	Pro-active compliance (Product out of EU RoHS legal scope)
China Rohs Regulation	China RoHS declaration
Environmental Disclosure	Product Environmental Profile
Weee	The product must be disposed on European Union markets following specific waste collection and never end up in rubbish bins.
Circularity Profile	End of Life Information
California Proposition 65	WARNING: This product can expose you to chemicals including: Lead and lead compounds, which is known to the State of California to cause cancer and birth defects or other reproductive harm. For more information go to www.P65Warnings.ca.gov

Dimensions Drawings

External Dimensions

With Standard Braking Resistor

Mounting type A

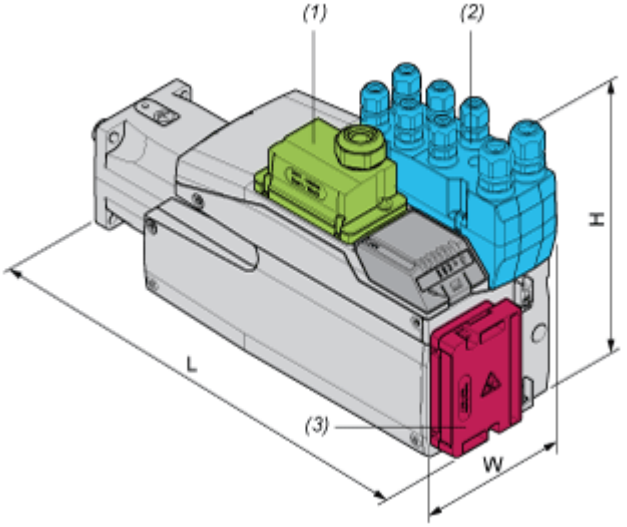

(1) Module for supply voltage

(2) I/O module

(3) Standard braking resistor

Dimensions in mm

W	H	L
132,6	217	320

Dimensions in in.

W	H	L
5,22	8,54	12,6

Mounting type B

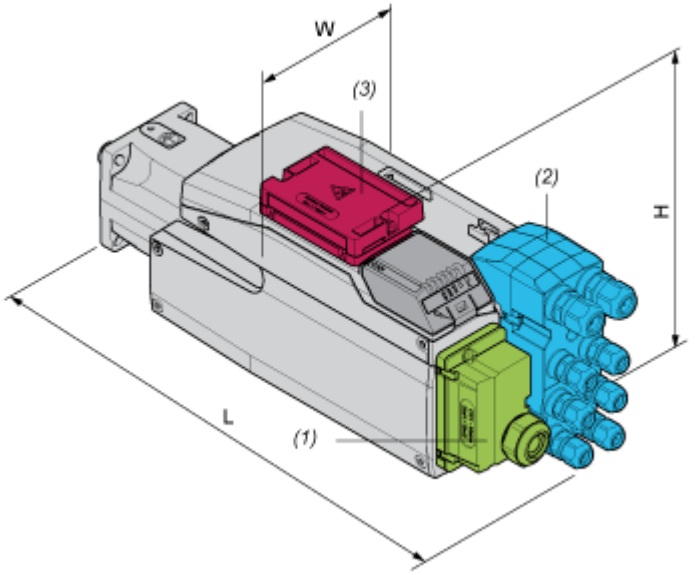

(1) Module for supply voltage

(2) I/O module

(3) Standard braking resistor

Dimensions in mm

W	H	L
132,6	168	369

Dimensions in in.

W	H	L
5,22	6,61	14,53

With External Braking Resistor

Mounting type C

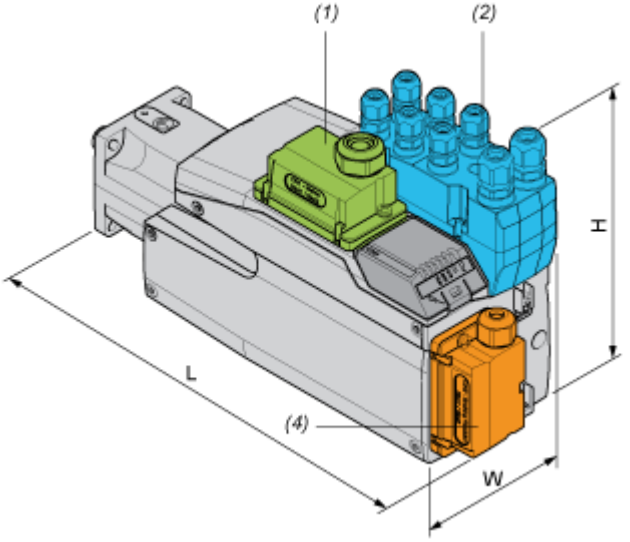

(1) Module for supply voltage

(2) I/O module

(4) External braking resistor

Dimensions in mm

W	H	L
132,6	217	332

Dimensions in in.

W	H	L
5,22	8,54	13,07

Mounting type D

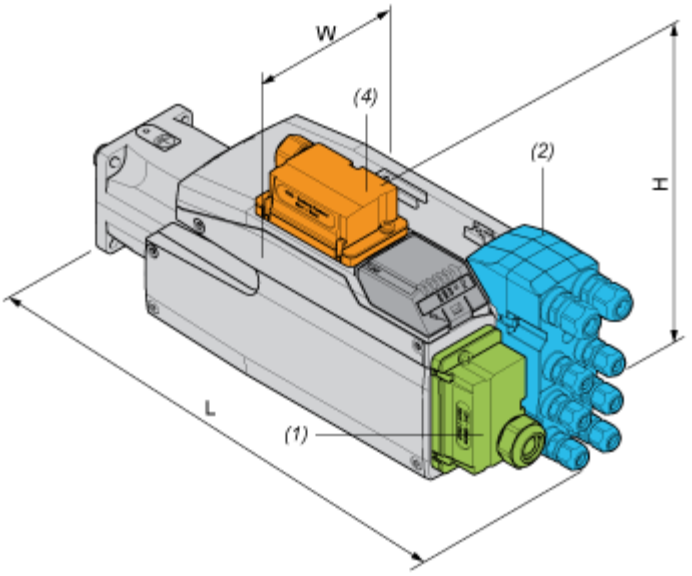

(1) Module for supply voltage

(2) I/O module

(4) External braking resistor

Dimensions in mm

W	H	L
132,6	180	369

Dimensions in in.

W	H	L
5,22	7,09	14,53

Mounting type E

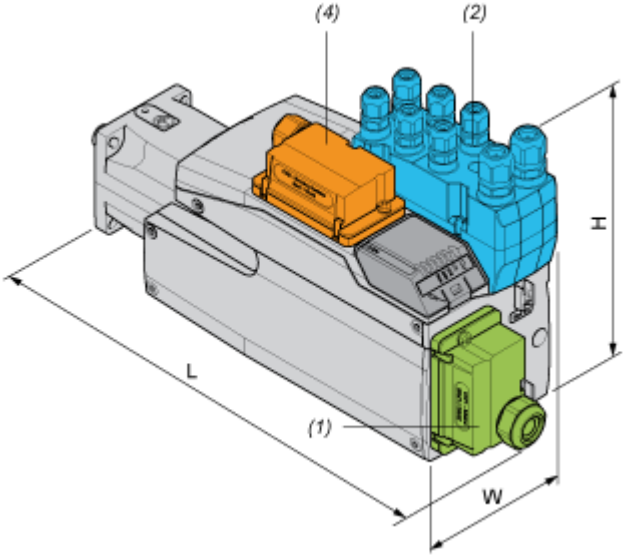

(1) Module for supply voltage

(2) I/O module

(4) External braking resistor

Dimensions in mm

W	H	L
132,6	217	359

Dimensions in in.

W	H	L
5,22	8,54	14,13

Mounting type F

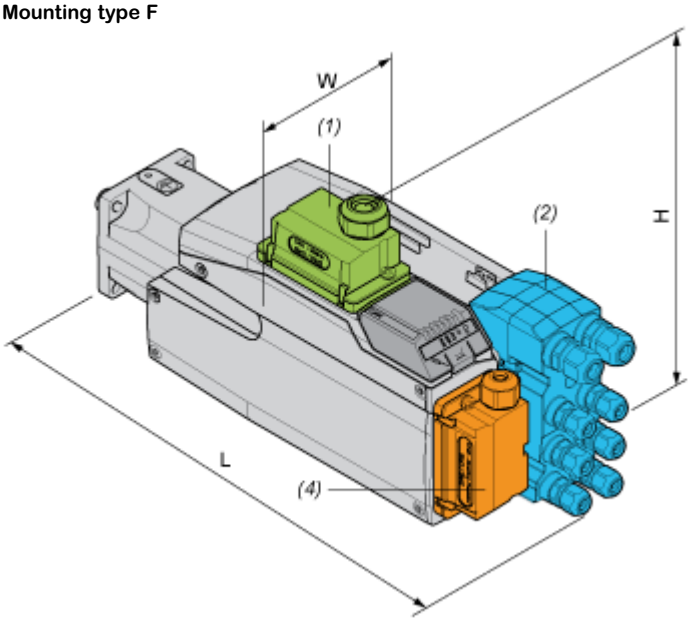

(1) Module for supply voltage

(2) I/O module

(4) External braking resistor

Dimensions in mm

W	H	L
132,6	206,5	369

Dimensions in in.

W	H	L
5,22	8,13	14,53

Performance Curves

Performance Curves

Torque/Speed Curves with 208 V Three Phases Supply Voltage

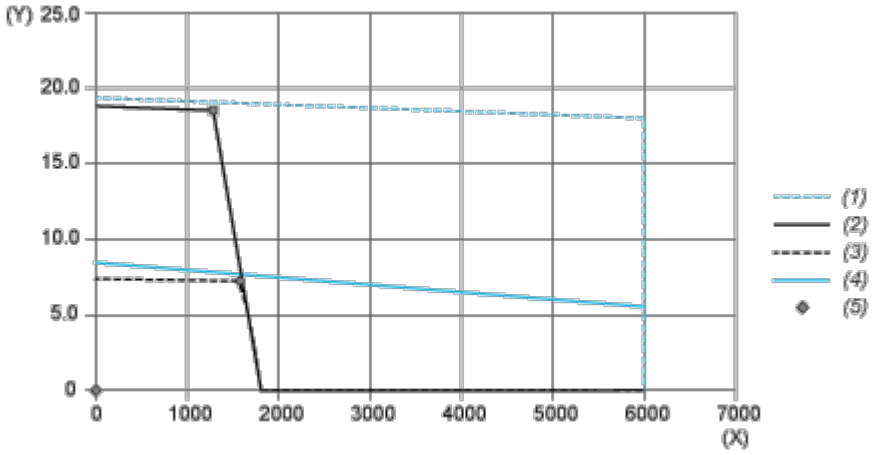

(X) Speed (rpm)

(Y) Torque (N.m)

(1) Motor peak

(2) Drive peak

(3) Drive cont

(4) Motor cont

(5) Operating point

		Power	At Speed	With Torque
max. Peak Power	■	2675 W	1380 rpm	18.51 N.m
max Cont. Power (Drive)	●	1223 W	1620 rpm	7.21 N.m

Performance Curves

Torque/Speed Curves with 400 V Three Phases Supply Voltage

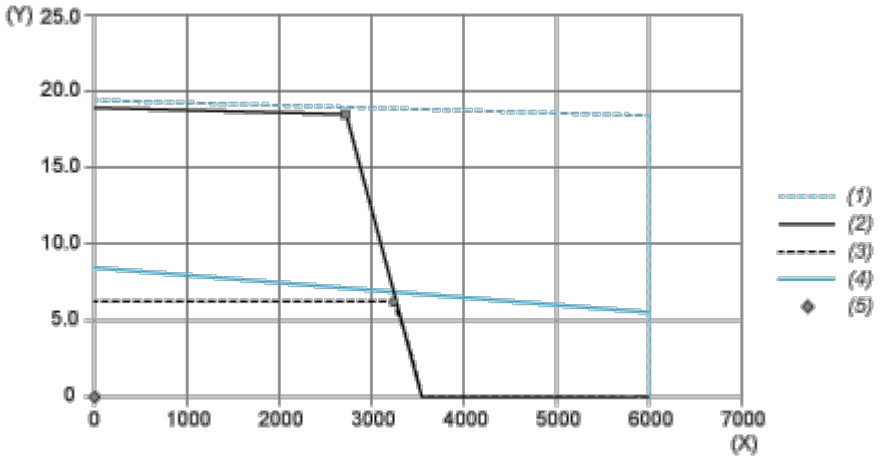

(X) Speed (rpm)

(Y) Torque (N.m)

(1) Motor peak

(2) Drive peak

(3) Drive cont

(4) Motor cont

(5) Operating point

		Power	At Speed	With Torque
max. Peak Power	■	5328 W	2760 rpm	18.44 N.m
max Cont. Power (Drive)	●	2096 W	3240 rpm	6.18 N.m

Performance Curves

Torque/Speed Curves with 480 V Three Phases Supply Voltage

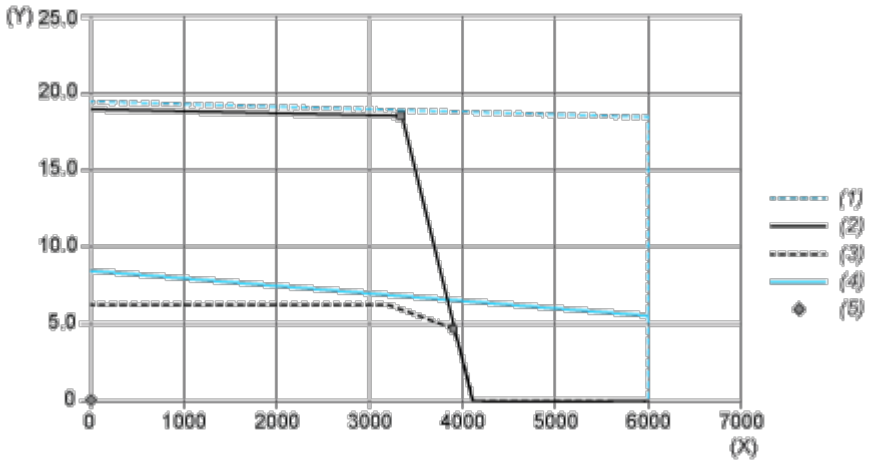

(X) Speed (rpm)

(Y) Torque (N.m)

(1) Motor peak

(2) Drive peak

(3) Drive cont

(4) Motor cont

(5) Operating point

		Power	At Speed	With Torque
max. Peak Power	■	6454 W	3360 rpm	18.34 N.m
max Cont. Power (Drive)	●	1994 W	3960 rpm	4.81 N.m