Product data sheet

Specifications

3-phase stepper motor - 6.78 Nm - shaft Ø 14 mm - L=128 mm - with brake - conn

BRS39BW760FCA

Product availability: Non-Stock - Not normally stocked in distribution facility

Price*: 1,755.00 USD

Main

Range Compatibility	Lexium SD3
Product Or Component Type	Motion control motor
Device Short Name	BRS3
Maximum Mechanical Speed	3000 rpm
Motor Type	3-phase stepper motor
Number Of Motor Poles	6
Supply Voltage Limits	230 V AC 325 V DC
Mounting Support	Flange
Motor Flange Size	3.35 in (85 mm)
Length	8.54 in (217 mm)
Centring Collar Diameter	2.36 in (60 mm)

Complementary

Centring Collar Depth	0.08 in (2 mm)
Number Of Mounting Holes	4
Mounting Holes Diameter	0.26 in (6.5 mm)
Circle Diameter Of The Mounting Holes	3.90 in (98.99 mm)
Electrical Connection	Connector
Holding Brake	With
Shaft End	Woodruff key
Second Shaft	Without second shaft end
Shaft Diameter	0.55 in (14 mm)
Shaft Length	1.18 in (30 mm)
Nominal Torque	53.10 lbf.in (6 N.m)
Peak Stall Torque	51.16 lbf.in (5.78 N.m)
Continuous Stall Torque	51.16 lbf.in (5.78 N.m)
Holding Torque	60.01 lbf.in (6.78 N.m)
Rotor Inertia	3.3 kg.cm²

Price is “List Price” and may be subject to a trade discount – check with your local distributor or retailer for actual price.

Disclaimer: This documentation is not intended as a substitute for and is not to be used for determining suitability or reliability of these products for specific user applications

Resolution	1.8 °, 0.9 °, 0.72 °, 0.36 °, 0.18 °, 0.09 °, 0.072 °, 0.036 ° step angle 200, 400, 500, 1000, 2000, 4000, 5000, 10000 steps number of full steps per revolution
Accuracy Error	+/- 6 arc min
Maximum Starting Frequency	5.3 kHz
Line Rated Current	2.25 A
Resistance	6.5 Ohm winding)
Time Constant	10 ms
Maximum Radial Force Fr	110 N first shaft end) 50 N second shaft end)
Maximum Axial Force Fa	175 N tensile force) 30 N force pressure)
Service Life In Hours	20000 h bearing)
Angular Acceleration	200000 rad/s²
Net Weight	9.48 lb(US) (4.3 kg)

Environment

Standards	EN 50347 IEC 60072-1
Type Of Cooling	Natural convection
Ambient Air Temperature For Operation	-13…104 °F (-25…40 °C)
Ambient Air Temperature For Storage	-13…158 °F (-25…70 °C)
Operating Altitude	<= 3280.84 ft (1000 m) without power derating
Relative Humidity	15…85 % without condensation
Vibration Resistance	20 m/s² maximum A EN/IEC 60034-14
Ip Degree Of Protection	IP41 shaft bushing: conforming to EN/IEC 60034-5 IP56 total except shaft bushing: conforming to EN/IEC 60034-5
Temperature Class	F winding IEC/EN 60034-1

Ordering and shipping details

Category	US1PC5518284
Discount Schedule	PC55
Gtin	3389119224093
Returnability	No
Country Of Origin	DE

Packing Units

Unit Type Of Package 1	PCE
Number Of Units In Package 1	1
Package 1 Height	4.33 in (11.0 cm)
Package 1 Width	7.48 in (19.0 cm)
Package 1 Length	15.55 in (39.5 cm)
Package 1 Weight	12.79 lb(US) (5.8 kg)

Contractual warranty

Warranty	18 months

Sustainability

Green Premium™ label is Schneider Electric's commitment to delivering products with best-in-class environmental performance. Green Premium promises compliance with the latest regulations, transparency on environmental impacts, as well as circular and low-CO_2 products.

Guide to assessing product sustainability is a white paper that clarifies global eco-label standards and how to interpret environmental declarations.

Learn more about Green Premium >

Guide to assess a product's sustainability >

Transparency RoHS/REACh

Well-being performance

Mercury Free	
Rohs Exemption Information	Yes
Pvc Free	

Certifications & Standards

Reach Regulation	REACh Declaration
Eu Rohs Directive	Pro-active compliance (Product out of EU RoHS legal scope)
China Rohs Regulation	China RoHS declaration
Environmental Disclosure	Product Environmental Profile
Weee	The product must be disposed on European Union markets following specific waste collection and never end up in rubbish bins.
Circularity Profile	No need of specific recycling operations
California Proposition 65	WARNING: This product can expose you to chemicals including: Lead and lead compounds, which is known to the State of California to cause cancer and birth defects or other reproductive harm. For more information go to www.P65Warnings.ca.gov

Dimensions Drawings

Dimensions

3-Phase Stepper Motor in Connector Version

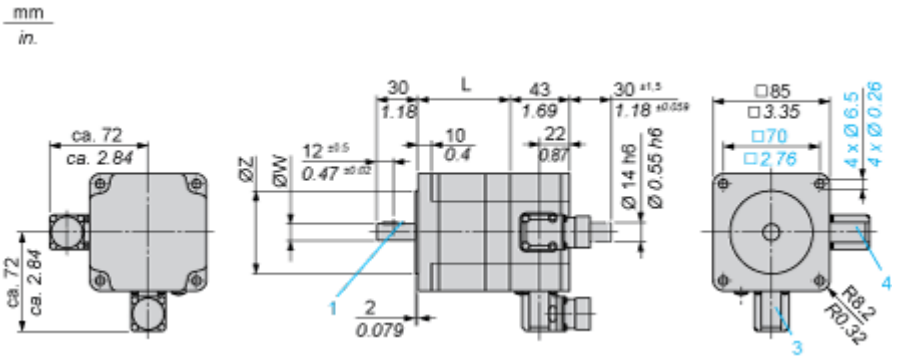

3 : Motor connection 6 poles

4 : Motor connection (optional) 12 poles

Holding Brake

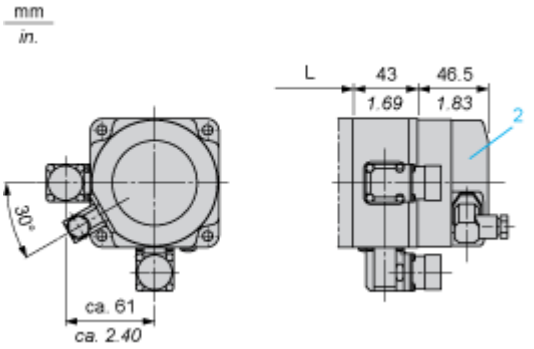

2 : Holding brake (optional)

Dimensions in mm

L	Shaft diameter ØW	Centring collar ØZ	Woodruff key DIN 6888 (1)
127.5 (+0.6) (-0.8)	14 h6	60 h8	5 x 6.5

Dimensions in in.

L	Shaft diameter ØW	Centring collar ØZ	Woodruff key DIN 6888 (1)
5.02 (+0.023) (-0.031)	0.55 h6	2.36 h8	0.20 x 0.25

Connections and Schema

Wiring Diagram of Holding Brake

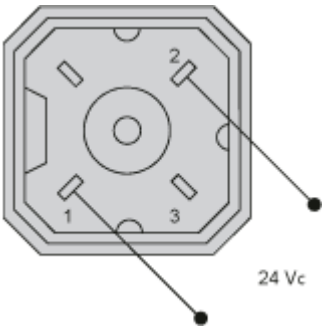

The connector is part of the scope of delivery. Connector designation: Hirschmann type G4 A 5M

Performance Curves

Torque Characteristics

Measurement at 1000 Steps/Revolution, Nominal Voltage DC Bus U_N and Phase Current I_N

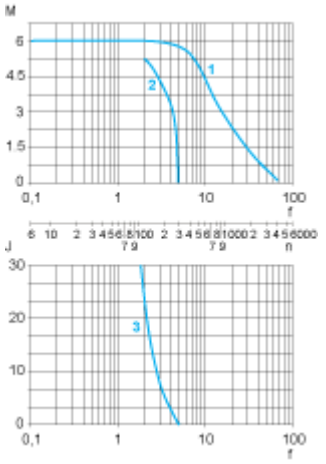

M : Torque in Nm

n : Speed in rpm

f : Frequency in kHz

J : Rotor inertia in $kg.cm^2$

1 : Pull-out torque

2 : Pull-in torque

3 : Maximum load inertia