Product data sheet

Specifications

Green Premium™

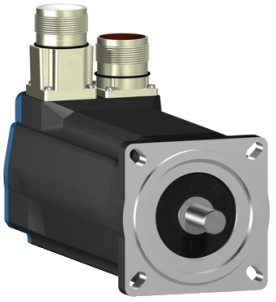

AC servo motor BSH, Lexium 05, 2.83N.m, 6000rpm, untapped shaft, with brake, IP65

BSH0703T21F1A

Discontinued on: Jun 30, 2023

Discontinued

Product availability: Non-Stock - Not normally stocked in distribution facility

Main

Product Or Component Type	Servo motor
Device Short Name	BSH
Maximum Mechanical Speed	8000 rpm
Continuous Stall Torque	24.78 lbf.in (2.8 N.m) LXM05AD28M2, 200...240 V, single phase 24.78 lbf.in (2.8 N.m) LXM05BD28M2, 200...240 V, single phase 24.78 lbf.in (2.8 N.m) LXM05CD28M2, 200...240 V, single phase 23.01 lbf.in (2.6 N.m) LXM32.D18M2 6 A, 230 V, single phase 25.05 lbf.in (2.83 N.m) LXM15LD28M3, 230 V, three phase 24.78 lbf.in (2.8 N.m) LXM05AD28F1, 110...120 V, single phase 24.78 lbf.in (2.8 N.m) LXM05AD42M3X, 200...240 V, three phase 24.78 lbf.in (2.8 N.m) LXM05BD28F1, 110...120 V, single phase 24.78 lbf.in (2.8 N.m) LXM05BD42M3X, 200...240 V, three phase 24.78 lbf.in (2.8 N.m) LXM05CD28F1, 110...120 V, single phase 24.78 lbf.in (2.8 N.m) LXM05CD42M3X, 200...240 V, three phase
Peak Stall Torque	65.32 lbf.in (7.38 N.m) LXM05AD28F1, 110...120 V, single phase 65.32 lbf.in (7.38 N.m) LXM05AD28M2, 200...240 V, single phase 65.32 lbf.in (7.38 N.m) LXM05BD28F1, 110...120 V, single phase 65.32 lbf.in (7.38 N.m) LXM05BD28M2, 200...240 V, single phase 65.32 lbf.in (7.38 N.m) LXM05CD28F1, 110...120 V, single phase 65.32 lbf.in (7.38 N.m) LXM05CD28M2, 200...240 V, single phase 65.50 lbf.in (7.4 N.m) LXM32.D18M2 6 A, 230 V, single phase 65.32 lbf.in (7.38 N.m) LXM15LD28M3, 230 V, three phase 90.72 lbf.in (10.25 N.m) LXM05AD42M3X, 200...240 V, three phase 90.72 lbf.in (10.25 N.m) LXM05BD42M3X, 200...240 V, three phase 90.72 lbf.in (10.25 N.m) LXM05CD42M3X, 200...240 V, three phase
Nominal Output Power	750 W LXM05AD28M2, 200...240 V, single phase 750 W LXM05BD28M2, 200...240 V, single phase 750 W LXM05CD28M2, 200...240 V, single phase 750 W LXM05AD28F1, 110...120 V, single phase 750 W LXM05BD28F1, 110...120 V, single phase 750 W LXM05CD28F1, 110...120 V, single phase 900 W LXM32.D18M2 6 A, 230 V, single phase 1250 W LXM15LD28M3, 230 V, three phase 750 W LXM05AD42M3X, 200...240 V, three phase 750 W LXM05BD42M3X, 200...240 V, three phase 750 W LXM05CD42M3X, 200...240 V, three phase
Nominal Torque	21.24 lbf.in (2.4 N.m) LXM05AD28M2, 200...240 V, single phase 21.24 lbf.in (2.4 N.m) LXM05BD28M2, 200...240 V, single phase 21.24 lbf.in (2.4 N.m) LXM05CD28M2, 200...240 V, single phase 21.24 lbf.in (2.4 N.m) LXM05AD28F1, 110...120 V, single phase 21.24 lbf.in (2.4 N.m) LXM05BD28F1, 110...120 V, single phase 21.24 lbf.in (2.4 N.m) LXM05CD28F1, 110...120 V, single phase 18.59 lbf.in (2.1 N.m) LXM32.D18M2 6 A, 230 V, single phase 17.70 lbf.in (2 N.m) LXM15LD28M3, 230 V, three phase 21.24 lbf.in (2.4 N.m) LXM05AD42M3X, 200...240 V, three phase 21.24 lbf.in (2.4 N.m) LXM05BD42M3X, 200...240 V, three phase 21.24 lbf.in (2.4 N.m) LXM05CD42M3X, 200...240 V, three phase

Price is “List Price” and may be subject to a trade discount – check with your local distributor or retailer for actual price.

Disclaimer: This documentation is not intended as a substitute for and is not to be used for determining suitability or reliability of these products for specific user applications

Nominal Speed	3000 rpm LXM05AD28M2, 200...240 V, single phase 3000 rpm LXM05BD28M2, 200...240 V, single phase 3000 rpm LXM05CD28M2, 200...240 V, single phase 3000 rpm LXM05AD42M3X, 200...240 V, three phase 3000 rpm LXM05BD42M3X, 200...240 V, three phase 3000 rpm LXM05CD42M3X, 200...240 V, three phase 3000 rpm LXM05AD28F1, 110...120 V, single phase 3000 rpm LXM05BD28F1, 110...120 V, single phase 3000 rpm LXM05CD28F1, 110...120 V, single phase 4000 rpm LXM32.D18M2 6 A, 230 V, single phase 6000 rpm LXM15LD28M3, 230 V, three phase
Product Compatibility	LXM05AD28F1 110...120 V single phase LXM05AD28M2 200...240 V single phase LXM05BD28F1 110...120 V single phase LXM05BD28M2 200...240 V single phase LXM05CD28F1 110...120 V single phase LXM05CD28M2 200...240 V single phase LXM32.D18M2 230 V single phase LXM05AD42M3X 200...240 V three phase LXM05BD42M3X 200...240 V three phase LXM05CD42M3X 200...240 V three phase LXM15LD28M3 230 V three phase
Shaft End	Untapped
Ip Degree Of Protection	IP65 standard IP67 with IP67 kit
Speed Feedback Resolution	131072 points/turn
Holding Brake	With
Mounting Support	International standard flange
Electrical Connection	Straight connectors

Complementary

Range Compatibility	Lexium 15 Lexium 05 Lexium 32
Supply Voltage Max	480 V
Phase	Three phase
Continuous Stall Current	7 A
Maximum Continuous Power	1.7 W
Maximum Current Irms	18 A LXM32.D18M2 30.9 A LXM15LD28M3 29.2 A LXM05AD28F1 29.2 A LXM05AD28M2 29.2 A LXM05AD42M3X 29.2 A LXM05BD28F1 29.2 A LXM05BD28M2 29.2 A LXM05BD42M3X 29.2 A LXM05CD28F1 29.2 A LXM05CD28M2 29.2 A LXM05CD42M3X
Maximum Permanent Current	29.2 A
Switching Frequency	8 kHz
Second Shaft	Without second shaft end
Shaft Diameter	0.55 in (14 mm)
Shaft Length	1.18 in (30 mm)
Feedback Type	Single turn SinCos Hiperface
Holding Torque	26.55 lbf.in (3 N.m) holding brake
Motor Flange Size	2.76 in (70 mm)

Number Of Motor Stacks	3
Torque Constant	0.44 N.m/A 248 °F (120 °C)
Back Emf Constant	29 V/krpm 248 °F (120 °C)
Number Of Motor Poles	6
Rotor Inertia	0.81 kg.cm²
Stator Resistance	0.91 Ohm 68 °F (20 °C)
Stator Inductance	4.4 mH 68 °F (20 °C)
Stator Electrical Time Constant	4.84 ms 68 °F (20 °C)
Maximum Radial Force Fr	400 N 6000 rpm 430 N 5000 rpm 460 N 4000 rpm 510 N 3000 rpm 580 N 2000 rpm 730 N 1000 rpm
Maximum Axial Force Fa	0.2 x Fr
Brake Pull-In Power	12 W
Type Of Cooling	Natural convection
Length	10.00 in (254 mm)
Centring Collar Diameter	2.36 in (60 mm)
Centring Collar Depth	0.10 in (2.5 mm)
Number Of Mounting Holes	4
Mounting Holes Diameter	0.22 in (5.5 mm)
Circle Diameter Of The Mounting Holes	3.23 in (82 mm)
Net Weight	8.38 lb(US) (3.8 kg)

Ordering and shipping details

Category	US1PC5318282
Discount Schedule	PC53
Gtin	3389118137622
Returnability	No
Country Of Origin	DE

Packing Units

Unit Type Of Package 1	PCE
Number Of Units In Package 1	1
Package 1 Height	4.84 in (12.3 cm)
Package 1 Width	5.04 in (12.8 cm)
Package 1 Length	14.84 in (37.7 cm)
Package 1 Weight	8.93 lb(US) (4.05 kg)

Contractual warranty

Warranty	18 months

Sustainability

Green Premium™ label is Schneider Electric's commitment to delivering products with best-in-class environmental performance. Green Premium promises compliance with the latest regulations, transparency on environmental impacts, as well as circular and low-CO_2 products.

Guide to assessing product sustainability is a white paper that clarifies global eco-label standards and how to interpret environmental declarations.

Learn more about Green Premium >

Guide to assess a product's sustainability >

Transparency RoHS/REACh

Well-being performance

Mercury Free

Rohs Exemption Information	Yes

Certifications & Standards

Reach Regulation	REACh Declaration
Eu Rohs Directive	Pro-active compliance (Product out of EU RoHS legal scope)
China Rohs Regulation	China RoHS declaration
Environmental Disclosure	Product Environmental Profile
Weee	The product must be disposed on European Union markets following specific waste collection and never end up in rubbish bins.
Circularity Profile	No need of specific recycling operations
California Proposition 65	WARNING: This product can expose you to chemicals including: Lead and lead compounds, which is known to the State of California to cause cancer and birth defects or other reproductive harm. For more information go to www.P65Warnings.ca.gov

Dimensions Drawings

Servo Motors Dimensions

Example with Straight Connectors

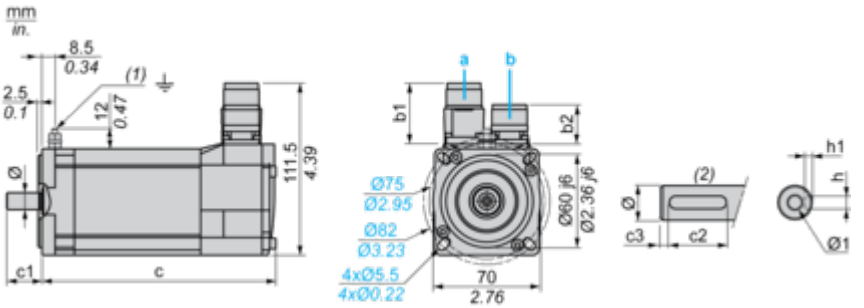

a: Power supply for servo motor brake
b: Power supply for servo motor encoder
(1) M4 screw
(2) Shaft end, keyed slot (optional)

Dimensions in mm

Straight connectors		Rotatable angled connectors		c (without brake)	c (with brake)	c1	c2	c3	h	h1	Ø	Ø1 for screws
b1	b2	b1	b2									
39.5	25.5	39.5	39.5	220	254	30	20	5	5 N9	$3^{+0.1}_{0}$	14 k6	M5 x 12.5

Dimensions in in.

Straight connectors		Rotatable angled connectors		c (without brake)	c (with brake)	c1	c2	c3	h	h1	Ø	Ø1 for screws
b1	b2	b1	b2									
1.55	1.00	1.55	1.55	8.66	10.00	1.18	0.78	0.19	0.20 N9	$0.12^{+0.004}_{0}$	0.55 k6	M5 x 0.49

Performance Curves

230 V Single-Phase Supply Voltage

Torque/Speed Curves

Servo motor with LXM32•D18M2 servo drive

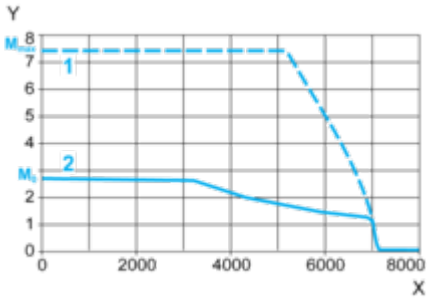

X Speed in rpm
Y Torque in Nm
1 Peak torque
2 Continuous torque