Product data sheet

Specifications

servo motor BSH, Lexium 32, 32.1N.m, 3000rpm, 140mm, keyed shaft, Sincos single turn, without brake, IP50

BSH1404P11A2P

Product availability: Non-Stock - Not normally stocked in distribution facility

Price*: 2,955.00 USD

Main

Product Or Component Type	Servo motor
Device Short Name	BSH
Maximum Mechanical Speed	4000 rpm
Continuous Stall Torque	295.61 lbf.in (33.4 N.m) LXM32.D72N4 24 A, 400 V, three phase 295.61 lbf.in (33.4 N.m) LXM32.D72N4 24 A, 480 V, three phase 284.11 lbf.in (32.1 N.m) LXM05AD57N4, 380...480 V, three phase 284.11 lbf.in (32.1 N.m) LXM05BD57N4, 380...480 V, three phase 284.11 lbf.in (32.1 N.m) LXM05CD57N4, 380...480 V, three phase
Peak Stall Torque	916.94 lbf.in (103.6 N.m) LXM32.D72N4 24 A, 400 V, three phase 916.94 lbf.in (103.6 N.m) LXM32.D72N4 24 A, 480 V, three phase 558.39 lbf.in (63.09 N.m) LXM05AD57N4, 380...480 V, three phase 558.39 lbf.in (63.09 N.m) LXM05BD57N4, 380...480 V, three phase 558.39 lbf.in (63.09 N.m) LXM05CD57N4, 380...480 V, three phase
Nominal Output Power	5000 W LXM32.D72N4 24 A, 400 V, three phase 5000 W LXM32.D72N4 24 A, 480 V, three phase 3400 W LXM05AD57N4, 380...480 V, three phase 3400 W LXM05BD57N4, 380...480 V, three phase 3400 W LXM05CD57N4, 380...480 V, three phase
Nominal Torque	168.16 lbf.in (19 N.m) LXM32.D72N4 24 A, 400 V, three phase 168.16 lbf.in (19 N.m) LXM32.D72N4 24 A, 480 V, three phase 95.59 lbf.in (10.8 N.m) LXM05AD57N4, 380...480 V, three phase 95.59 lbf.in (10.8 N.m) LXM05BD57N4, 380...480 V, three phase 95.59 lbf.in (10.8 N.m) LXM05CD57N4, 380...480 V, three phase
Nominal Speed	2500 rpm LXM32.D72N4 24 A, 400 V, three phase 2500 rpm LXM32.D72N4 24 A, 480 V, three phase 3000 rpm LXM05AD57N4, 380...480 V, three phase 3000 rpm LXM05BD57N4, 380...480 V, three phase 3000 rpm LXM05CD57N4, 380...480 V, three phase
Product Compatibility	LXM05AD57N4 380...480 V three phase LXM05BD57N4 380...480 V three phase LXM05CD57N4 380...480 V three phase LXM32.D72N4 400 V three phase LXM32.D72N4 480 V three phase
Shaft End	Keyed
Ip Degree Of Protection	IP50 standard
Speed Feedback Resolution	131072 points/turn
Holding Brake	Without
Mounting Support	International standard flange
Electrical Connection	Rotatable right-angled connectors

Complementary

Price is “List Price” and may be subject to a trade discount – check with your local distributor or retailer for actual price.

Disclaimer: This documentation is not intended as a substitute for and is not to be used for determining suitability or reliability of these products for specific user applications

Range Compatibility	Lexium 05 Lexium 32
Supply Voltage Max	480 V
Phase	Three phase
Continuous Stall Current	21.3 A
Maximum Continuous Power	4.33 W
Maximum Current Irms	72 A LXM32.D72N4 95.6 A LXM05AD57N4 95.6 A LXM05BD57N4 95.6 A LXM05CD57N4
Maximum Permanent Current	95.6 A
Switching Frequency	8 kHz
Second Shaft	Without second shaft end
Shaft Diameter	0.94 in (24 mm)
Shaft Length	1.97 in (50 mm)
Key Width	1.57 in (40 mm)
Feedback Type	Single turn SinCos Hiperface
Motor Flange Size	5.51 in (140 mm)
Number Of Motor Stacks	4
Torque Constant	1.57 N.m/A 248 °F (120 °C)
Back Emf Constant	104 V/krpm 248 °F (120 °C)
Number Of Motor Poles	10
Rotor Inertia	23.7 kg.cm²
Stator Resistance	0.28 Ohm 68 °F (20 °C)
Stator Inductance	3.9 mH 68 °F (20 °C)
Stator Electrical Time Constant	13.93 ms 68 °F (20 °C)
Maximum Radial Force Fr	1840 N 3000 rpm 2110 N 2000 rpm 2660 N 1000 rpm
Maximum Axial Force Fa	0.2 x Fr
Type Of Cooling	Natural convection
Length	15.06 in (382.5 mm)
Centring Collar Diameter	5.12 in (130 mm)
Centring Collar Depth	0.14 in (3.5 mm)
Number Of Mounting Holes	4
Mounting Holes Diameter	0.43 in (11 mm)
Circle Diameter Of The Mounting Holes	6.50 in (165 mm)
Net Weight	57.32 lb(US) (26 kg)

Ordering and shipping details

Category	US1PC5318282
Discount Schedule	PC53
Gtin	3389118361485
Returnability	No

Country Of Origin	DE

Packing Units

Unit Type Of Package 1	PCE
Number Of Units In Package 1	1
Package 1 Height	10.63 in (27.0 cm)
Package 1 Width	10.63 in (27.0 cm)
Package 1 Length	23.86 in (60.6 cm)
Package 1 Weight	40.79 lb(US) (18.5 kg)

Contractual warranty

Warranty	18 months

Sustainability

Green Premium™ label is Schneider Electric's commitment to delivering products with best-in-class environmental performance. Green Premium promises compliance with the latest regulations, transparency on environmental impacts, as well as circular and low-CO_2 products.

Guide to assessing product sustainability is a white paper that clarifies global eco-label standards and how to interpret environmental declarations.

Learn more about Green Premium >

Guide to assess a product's sustainability >

Transparency RoHS/REACh

Well-being performance

Mercury Free	
Rohs Exemption Information	Yes
Pvc Free	

Certifications & Standards

Reach Regulation	REACh Declaration
Eu Rohs Directive	Pro-active compliance (Product out of EU RoHS legal scope)
China Rohs Regulation	China RoHS declaration
Environmental Disclosure	Product Environmental Profile
Weee	The product must be disposed on European Union markets following specific waste collection and never end up in rubbish bins.
Circularity Profile	No need of specific recycling operations
California Proposition 65	WARNING: This product can expose you to chemicals including: Lead and lead compounds, which is known to the State of California to cause cancer and birth defects or other reproductive harm. For more information go to www.P65Warnings.ca.gov

Dimensions Drawings

Servo Motors Dimensions

Example with Straight Connectors

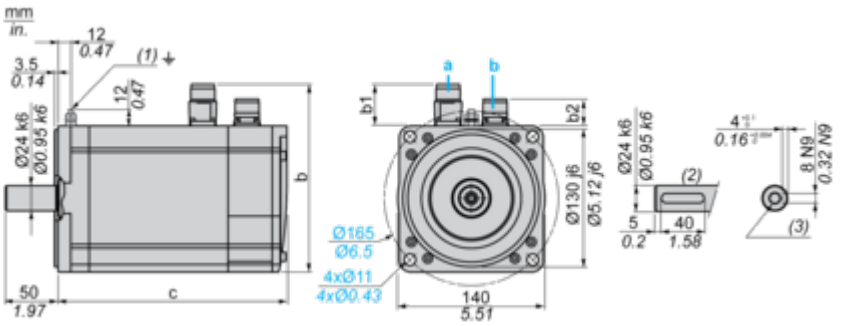

a: Power supply for servo motor brake
b: Power supply for servo motor encoder
(1) M4 screw
(2) Shaft end, keyed slot (optional)
(3) For screws M8 x 19 mm/M8 x 0.75 in.

Dimensions in mm

Straight connectors			Rotatable angled connectors			c (without brake)	c (with brake)
b	b1	b2	b	b1	b2		
192.5	54	25.5	198.5	60	39.5	383	421

Dimensions in in.

Straight connectors			Rotatable angled connectors			c (without brake)	c (with brake)
b	b1	b2	b	b1	b2		
7.57	2.12	1.00	7.81	2.36	1.55	15.07	16.57

Performance Curves

400 V 3-Phase Supply Voltage

Torque/Speed Curves

Servo motor with LXM32•D72N4 servo drive

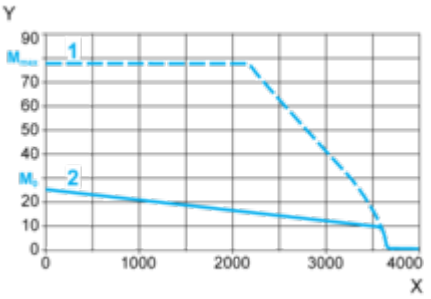

X Speed in rpm
Y Torque in Nm
1 Peak torque
2 Continuous torque

480 V 3-Phase Supply Voltage

Torque/Speed Curves

Servo motor with LXM32•D72N4 servo drive

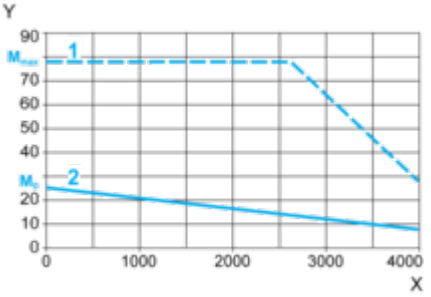

X Speed in rpm
Y Torque in Nm
1 Peak torque
2 Continuous torque