Product data sheet

Specifications

Safety switch, heavy duty, fusible, 1200A, 3 pole, 250hp, 240VAC/ 250VDC, NEMA 1

H328

Product availability: Non-Stock - Not normally stocked in distribution facility

Price*: 14,517.00 USD

Main

Product	Single Throw Safety Switch
Duty Rating	Heavy duty
Device Application	Heavy application
Disconnect Type	Fusible disconnect
Factory Installed Neutral	None
Phase	3 phase
Number Of Poles	3
Current Rating	1200 A
Voltage Rating	250 V DC 240 V AC
Enclosure Rating	NEMA 1 steel
Motor Power Hp	50 hp at 240 V AC 50-60 Hz for 1 phase motors 100 hp at 240 V AC 50-60 Hz for 3 phase motors 250 hp at 240 V AC 50-60 Hz for 3 phase motors 50 hp at 250 V DC

Complementary

Short-Circuit Current	200 kA maximum for L
Fuse Type	L
Mounting Type	Surface
Electrical Connection	Lugs
Wiring Configuration	3-wire (3P)
Wire Size	AWG 3/0...750 kcmil copper or aluminium
Tightening Torque	375 lbf.in (42.37 N.m) 0.13…0.59 in² (85.01…380 mm²) (AWG 3/0...750 kcmil)
Depth	17.75 in (450.85 mm)
Width	36.62 in (930.15 mm)
Height	69.13 in (1755.90 mm)
Net Weight	363.10 lb(US) (164.7 kg)

Environment

Certifications	UL listed file E2875

Price is “List Price” and may be subject to a trade discount – check with your local distributor or retailer for actual price.

Disclaimer: This documentation is not intended as a substitute for and is not to be used for determining suitability or reliability of these products for specific user applications

Ordering and shipping details

Category	US10DE100053
Discount Schedule	0DE1
Gtin	785901823063
Returnability	No
Country Of Origin	MX

Packing Units

Unit Type Of Package 1	PCE
Number Of Units In Package 1	1

Contractual warranty

Warranty	18 months

Sustainability

Green Premium™ label is Schneider Electric's commitment to delivering products with best-in-class environmental performance. Green Premium promises compliance with the latest regulations, transparency on environmental impacts, as well as circular and low-CO_2 products.

Guide to assessing product sustainability is a white paper that clarifies global eco-label standards and how to interpret environmental declarations.

Learn more about Green Premium >

Guide to assess a product's sustainability >

Transparency RoHS/REACh

Well-being performance

Mercury Free	
Rohs Exemption Information	Yes
Pvc Free	
Halogen Free Plastic Parts Product	

Certifications & Standards

Reach Regulation	REACh Declaration
Eu Rohs Directive	Compliant with Exemptions
China Rohs Regulation	China RoHS declaration Product out of China RoHS scope. Substance declaration for your information.
Environmental Disclosure	Product Environmental Profile
Circularity Profile	No need of specific recycling operations
California Proposition 65	WARNING: This product can expose you to chemicals including: Lead and lead compounds, which is known to the State of California to cause cancer and birth defects or other reproductive harm. For more information go to www.P65Warnings.ca.gov

Dimensions Drawings

Approximate Dimensions

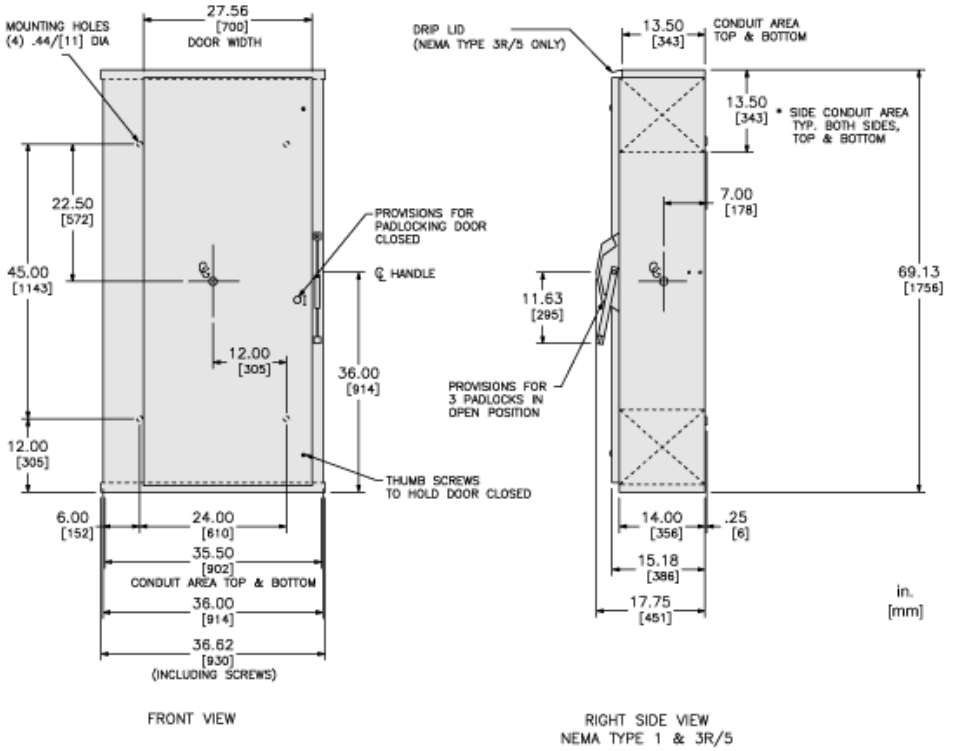

CATALOG NUMBER	VOLTAGE RATINGS	WIRING DIAG.	3 PHASE HORSEPOWER RATINGS						DC HORSEPOWER RATINGS			
			240VAC		480VAC		600VAC		250VDC		600VDC	
			STD	MAX.	STD	MAX.	STD	MAX.	STD	MAX.	STD	MAX.
H32B	240VAC;250VDC	A	100	250	–	–	–	–	50	50	–	–
H32BR	240VAC;250VDC	A	100	250	–	–	–	–	50	50	–	–
H32BN	240VAC;250VDC	B	100	250	–	–	–	–	50	50	–	–
H32BNR	240VAC;250VDC	B	100	250	–	–	–	–	50	50	–	–
H36B	600VAC;600VDC	A	100	250	200	500	250	500	–	–	50	50
H36BR	600VAC;600VDC	A	100	250	200	500	250	500	–	–	50	50
H36BN	600VAC;600VDC	B	100	250	200	500	250	500	–	–	50	50
H36BNR	600VAC;600VDC	B	100	250	200	500	250	500	–	–	50	50
HU36B	600VAC;600VDC	C	100	100	–	500	–	500	–	–	50	50
HU36BR	600VAC;600VDC	C	100	100	–	500	–	500	–	–	50	50

Connections and Schema

Wiring Diagrams

WIRING DIAGRAMS	
FUSIBLE	NOT FUSIBLE

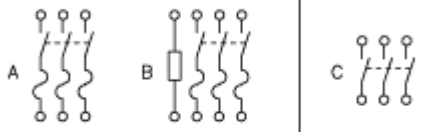

TERMINAL LUGS			
AMPERES	MAX. WIRE	MIN. WIRE	TYPE
1200	(4)750 KCMIL	(4)#3/0 AWG	75°C AL OR CU

FUSE PROVISIONS			
AMPERES	TYPE	AMPERES	TYPE
1200	CLASS "L"	800	CLASS "L"