Product data sheet

Specifications

flat screen, Harmony GTU, 10.4inch wide display

HMIDT542

Product availability: Stock - Normally stocked in distribution facility

Price*: 2,580.00 USD

Main

Range Of Product	Harmony GTU
Product Or Component Type	Flat screen
Terminal Type	Touchscreen display
[Us] Rated Supply Voltage	12...24 V DC power supply
Supply Voltage Limits	10.8…28.8 V
Power Consumption In W	15 W
Inrush Current	30 A

Complementary

Integrated Connection Type	USB 2.0 type A USB 2.0 type mini B
Touchscreen Resolution	1024 x 1024
Pixel Resolution	800 x 600
Display Size	10.4 inch
Aspect Ratio	4:3
Display Type	Colour TFT LCD
Display Resolution	800 x 600 pixels SVGA
Display Colour	16 million colours
Backlight Lifespan	50000 hours
Touch Panel	Multi touch analogue resistive
Function Available	Brightness sensor
Type Of Cooling	Natural convection
Type Of Installation	Indoor installation
Cut-Out Dimensions	259 (+ 1/- 0) x 201 (+ 1/- 0) mm
Width	10.73 in (272.5 mm)
Height	8.44 in (214.5 mm)
Depth	2.64 in (67 mm)
Net Weight	5.95 lb(US) (2.7 kg)

Environment

Ip Degree Of Protection	Front panel IP66 Front panel IP67

Price is “List Price” and may be subject to a trade discount – check with your local distributor or retailer for actual price.

Disclaimer: This documentation is not intended as a substitute for and is not to be used for determining suitability or reliability of these products for specific user applications

Nema Degree Of Protection	NEMA 4X front panel
Standards	UL 508 ANSI/ISA 12-12-01 Class I division 2 CSA C22.2 No 213 CSA C22.2 No 142 IEC 61132-2
Product Certifications	CULus CE KC RCM UKCA UKEX
Ambient Air Temperature For Operation	32…140 °F (0…60 °C) IEC 61131-2
Ambient Air Temperature For Storage	-4…140 °F (-20…60 °C)
Relative Humidity	10…90 % non-condensing
Operating Altitude	6561.68 ft (2000 m)
Vibration Resistance	3.5 mm constant amplitude 5…9 Hz) IEC 61131-2 9.8 m/s² 9…150 Hz) IEC 61131-2
Shock Resistance	147 m/s²IEC 61131-2
Electromagnetic Compatibility	Electrostatic discharge immunity test level 3 conforming to IEC 61000-4-2

Ordering and shipping details

Category	US10MC222567
Discount Schedule	0MC2
Gtin	3606480687259
Returnability	Yes
Country Of Origin	CN

Packing Units

Unit Type Of Package 1	PCE
Number Of Units In Package 1	1
Package 1 Height	8.27 in (21 cm)
Package 1 Width	12.99 in (33 cm)
Package 1 Length	14.57 in (37 cm)
Package 1 Weight	8.43 lb(US) (3.826 kg)

Contractual warranty

Warranty	18 months

Sustainability

Green Premium™ label is Schneider Electric's commitment to delivering products with best-in-class environmental performance. Green Premium promises compliance with the latest regulations, transparency on environmental impacts, as well as circular and low-CO_2 products.

Guide to assessing product sustainability is a white paper that clarifies global eco-label standards and how to interpret environmental declarations.

Learn more about Green Premium >

Guide to assess a product's sustainability >

Transparency RoHS/REACh

Well-being performance

Mercury Free

Rohs Exemption Information	Yes

Certifications & Standards

Reach Regulation	REACh Declaration
Eu Rohs Directive	Pro-active compliance (Product out of EU RoHS legal scope)
China Rohs Regulation	China RoHS declaration
Environmental Disclosure	Product Environmental Profile
Weee	The product must be disposed on European Union markets following specific waste collection and never end up in rubbish bins.
Circularity Profile	End of Life Information
California Proposition 65	WARNING: This product can expose you to chemicals including: Lead and lead compounds, which is known to the State of California to cause cancer and birth defects or other reproductive harm. For more information go to www.P65Warnings.ca.gov

Dimensions Drawings

External Dimensions

Display Unit with Box Module

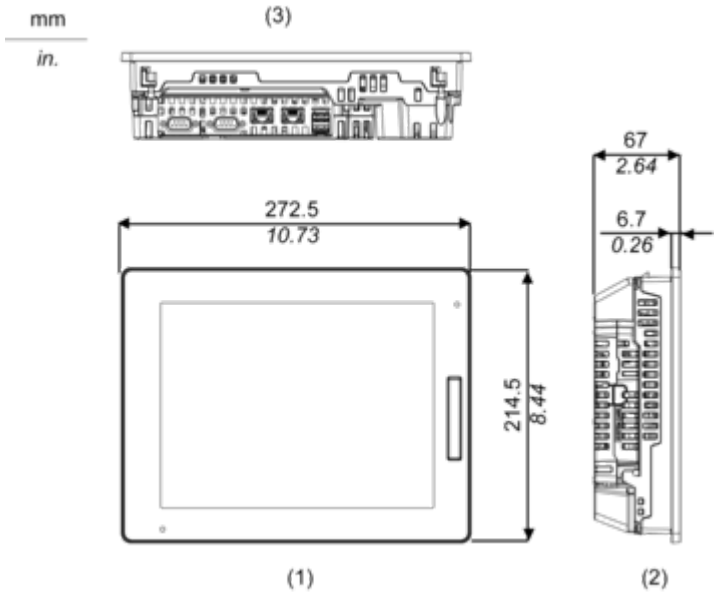

1 Front
2 Left
3 Bottom

Installation with Installation Fasteners and Dimensions with Cables

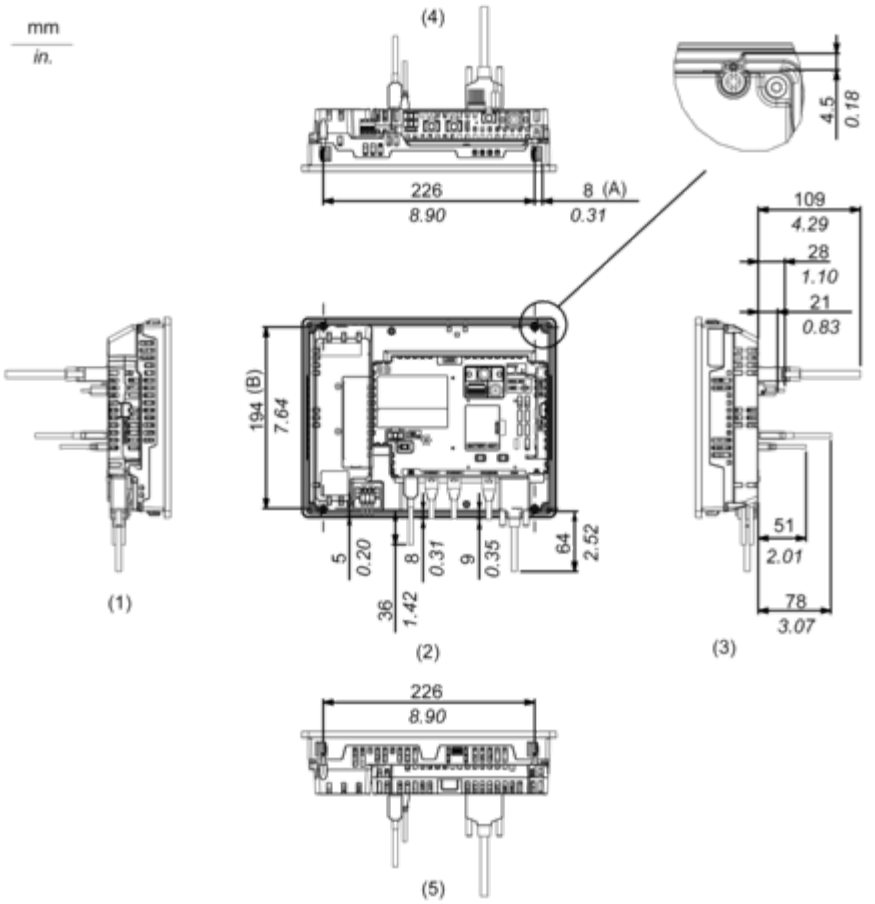

(A) Rotation area of the fastener
(B) Pitch of the center of installation fastner screws
1 Right
2 Front
3 Left
4 Bottom
5 Top

Mounting and Clearance

Mounting

Panel Cut Dimensions

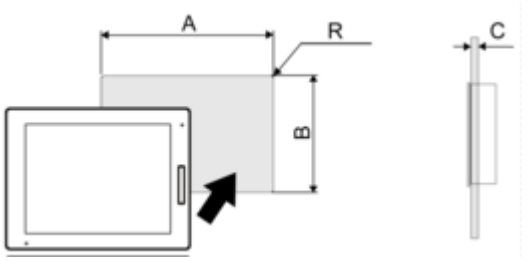

Dimensions in mm

A	B	C	R
259 (+1/-0)	201 (+1/-0)	1.6...5	3 max.

Dimensions in in.

A	B	C	R
10.2 (+0.04/-0)	7.91 (+0.04/-0)	0.06...0.2	0.12 max.

Installation Requirements

Mounting Angle

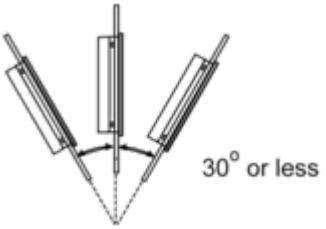

When installing this product in a slanted position with an incline more than 30°, the ambient temperature must not exceed 40 °C (104 °F). You may need to use forced air cooling (fan, A/C) to ensure the ambient operating temperature is 40 °C or less (104 °F or less).
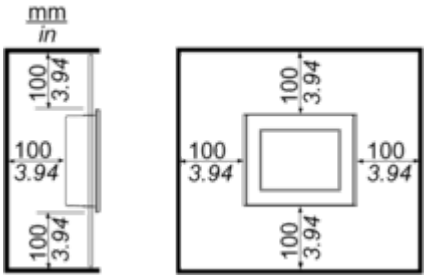
Clearance