# Product data sheet

Specifications

## flat screen, Harmony GTU, 12.1inch wide display, smart WLAN

HMIDT643

**Product availability: Stock - Normally stocked in distribution facility**

**Price*: 3,472.04 USD**

## Main

| | |
|---|---|
| **Range Of Product** | Harmony GTU |
| **Product Or Component Type** | Flat screen |
| **Terminal Type** | Touchscreen display |
| **[Us] Rated Supply Voltage** | 12...24 V DC power supply |
| **Supply Voltage Limits** | 10.8…28.8 V |
| **Power Consumption In W** | 23 W |
| **Inrush Current** | 30 A |

## Complementary

| | |
|---|---|
| **Integrated Connection Type** | USB 2.0 type A<br>USB 2.0 type mini B |
| **Communication Port Protocol** | WLAN 2.4 GHz |
| **Bandwidth** | 20 MHz |
| **Operating Mode** | Infrastructure |
| **Transmission Rate** | <= 11 Mbit/s IEEE 802.11b<br><= 54 Mbit/s IEEE 802.11g<br><= 72.2 Mbit/s IEEE 802.11n |
| **Maximum Sensing Distance** | 98.43 ft (30 m) depending on surrounding environment |
| **Touchscreen Resolution** | 1024 x 1024 |
| **Display Size** | 12.1 inch |
| **Aspect Ratio** | 4:3 |
| **Display Type** | Colour TFT LCD |
| **Display Resolution** | 1024 x 768 pixels XGA |
| **Display Colour** | 16 million colours |
| **Backlight Lifespan** | 50000 hours |
| **Touch Panel** | Multi touch analogue resistive |
| **Method Of Access** | Client mode 1…11, North America<br>Client mode 1…13, Japan<br>Client mode 1…13, Europe<br>Client mode 1…13, Korea<br>Client mode 1…13, China<br>Client mode 1…11, Taiwan<br>Access point mode 1…11 |

Price is “List Price” and may be subject to a trade discount – check with your local distributor or retailer for actual price.

Disclaimer: This documentation is not intended as a substitute for and is not to be used for determining suitability or reliability of these products for specific user applications

| | |
|---|---|
| **Encryption Protocol** | WEP 128<br>AES (Advanced Encryption Standard)<br>TKIP |
| **Type Of License** | 10 clients |
| **Function Available** | Brightness sensor |
| **Type Of Cooling** | Natural convection |
| **Type Of Installation** | Indoor installation |
| **Cut-Out Dimensions** | 301.5 (+ 1/- 0) x 227.5 (+ 1/- 0) mm |
| **Width** | 12.40 in (315 mm) |
| **Height** | 9.49 in (241 mm) |
| **Depth** | 2.64 in (67 mm) |
| **Net Weight** | 6.61 lb(US) (3 kg) |

## Environment

| | |
|---|---|
| **Ip Degree Of Protection** | Front panel IP66<br>Front panel IP67 |
| **Nema Degree Of Protection** | NEMA 4X front panel |
| **Standards** | UL 508<br>ANSI/ISA 12-12-01<br>Class I division 2 CSA C22.2 No 213<br>CSA C22.2 No 142<br>IEC 61132-2 |
| **Product Certifications** | CE<br>CULus<br>KC<br>RCM<br>UKCA<br>UKEX |
| **Ambient Air Temperature For Operation** | 32…140 °F (0…60 °C) IEC 61131-2 |
| **Ambient Air Temperature For Storage** | -4…140 °F (-20…60 °C) |
| **Relative Humidity** | 10…90 % non-condensing |
| **Operating Altitude** | 6561.68 ft (2000 m) |
| **Vibration Resistance** | 3.5 mm constant amplitude 5…9 Hz) IEC 61131-2<br>9.8 m/s² 9…150 Hz) IEC 61131-2 |
| **Shock Resistance** | 147 m/s²IEC 61131-2 |
| **Electromagnetic Compatibility** | Electrostatic discharge immunity test level 3 conforming to IEC 61000-4-2 |

## Ordering and shipping details

| | |
|---|---|
| **Category** | US10MC222567 |
| **Discount Schedule** | 0MC2 |
| **Gtin** | 3606480687235 |
| **Returnability** | Yes |
| **Country Of Origin** | CN |

## Packing Units

| | |
|---|---|
| **Unit Type Of Package 1** | PCE |
| **Number Of Units In Package 1** | 1 |
| **Package 1 Height** | 7.32 in (18.6 cm) |

| | |
|---|---|
| **Package 1 Width** | 12.99 in (33 cm) |
| **Package 1 Length** | 16.93 in (43 cm) |
| **Package 1 Weight** | 10.58 lb(US) (4.8 kg) |
| **Unit Type Of Package 2** | CAR |
| **Number Of Units In Package 2** | 2 |
| **Package 2 Height** | 15.75 in (40 cm) |
| **Package 2 Width** | 13.39 in (34 cm) |
| **Package 2 Length** | 17.32 in (44 cm) |
| **Package 2 Weight** | 21.61 lb(US) (9.8 kg) |
| **Unit Type Of Package 3** | P06 |
| **Number Of Units In Package 3** | 8 |
| **Package 3 Height** | 35.79 in (90.9 cm) |
| **Package 3 Width** | 23.62 in (60 cm) |
| **Package 3 Length** | 31.50 in (80 cm) |
| **Package 3 Weight** | 57.32 lb(US) (26 kg) |

## Contractual warranty

| | |
|---|---|
| **Warranty** | 18 months |

## Sustainability

**Green Premium™ label** is Schneider Electric's commitment to delivering products with best-in-class environmental performance. Green Premium promises compliance with the latest regulations, transparency on environmental impacts, as well as circular and low-$CO_2$ products.

**Guide to assessing product sustainability** is a white paper that clarifies global eco-label standards and how to interpret environmental declarations.

Learn more about Green Premium >

Guide to assess a product's sustainability >

Transparency RoHS/REACh

## Well-being performance

Mercury Free

Rohs Exemption Information Yes

## Certifications & Standards

| | |
|---|---|
| **Reach Regulation** | REACh Declaration |
| **Eu Rohs Directive** | Pro-active compliance (Product out of EU RoHS legal scope) |
| **China Rohs Regulation** | China RoHS declaration |
| **Environmental Disclosure** | Product Environmental Profile |
| **Weee** | The product must be disposed on European Union markets following specific waste collection and never end up in rubbish bins. |
| **Circularity Profile** | End of Life Information |
| **California Proposition 65** | WARNING: This product can expose you to chemicals including: Lead and lead compounds, which is known to the State of California to cause cancer and birth defects or other reproductive harm. For more information go to www.P65Warnings.ca.gov |

## Dimensions Drawings

### External Dimensions

#### Display Unit with Box Module

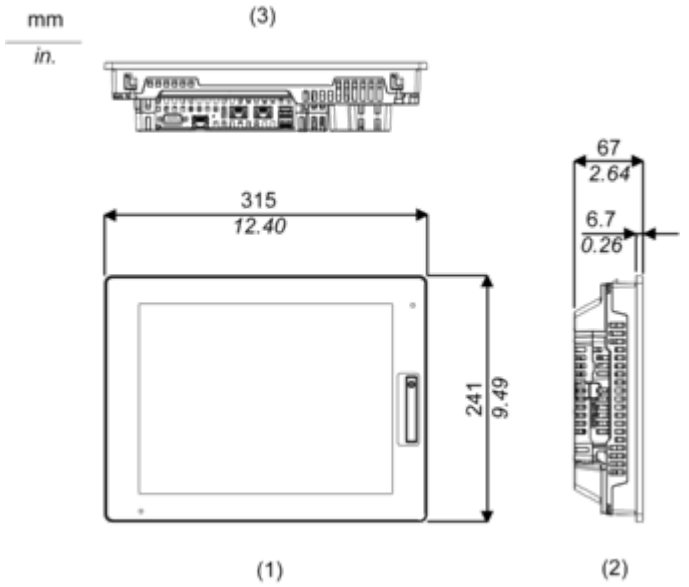


**1** Front
**2** Left
**3** Bottom

#### Installation with Installation Fasteners and Dimensions with Cables

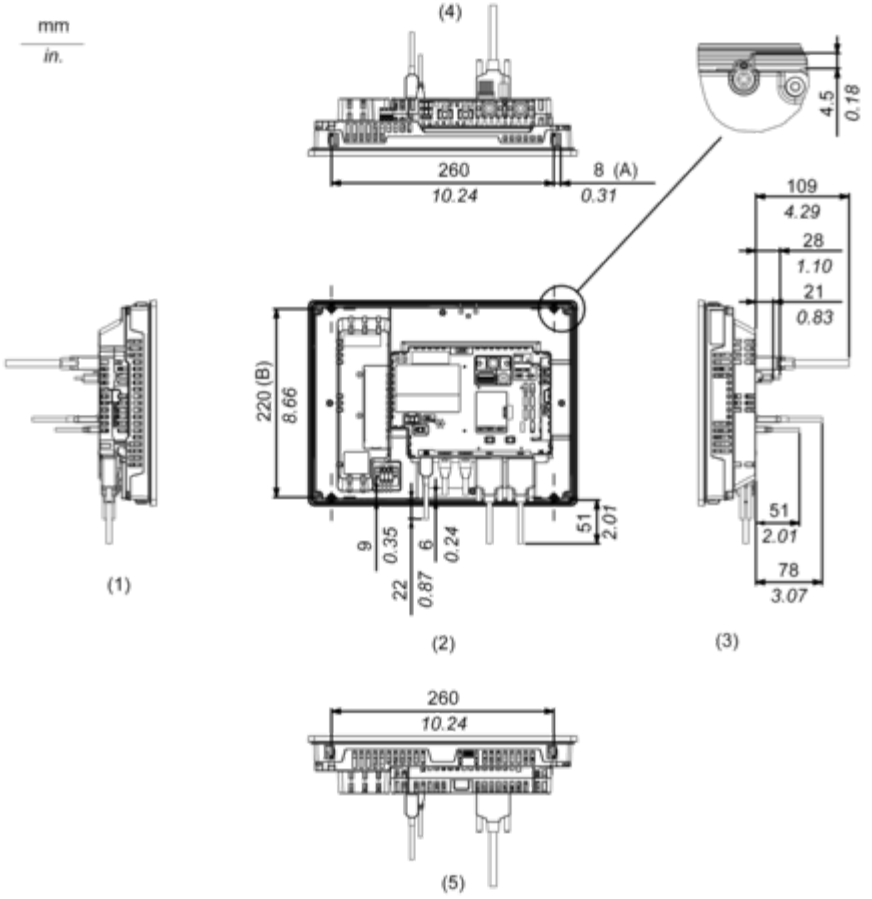


**(A)** Rotation area of the fastener
**(B)** Pitch of the center of installation fastner screws
**1** Right
**2** Front
**3** Left
**4** Bottom
**5** Top

## Mounting and Clearance

### Mounting

#### Panel Cut Dimensions

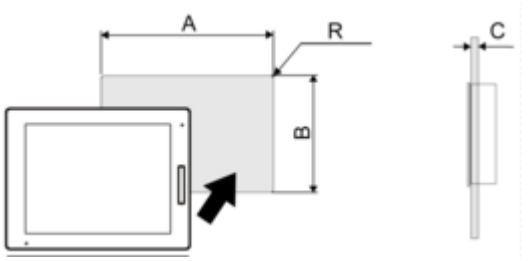


Dimensions in mm

| A | B | C | R |
|---|---|---|---|
| 301.5 (+1/-0) | 227.5 (+1/-0) | 1.6...5 | 3 max. |

Dimensions in in.

| A | B | C | R |
|---|---|---|---|
| 11.87 (+0.04/-0) | 8.96 (+0.04/-0) | 0.06...0.2 | 0.12 max. |

## Installation Requirements

### Mounting Angle

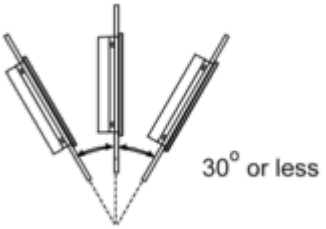


When installing this product in a slanted position with an incline more than 30°, the ambient temperature must not exceed 40 °C (104 °F). You may need to use forced air cooling (fan, A/C) to ensure the ambient operating temperature is 40 °C or less (104 °F or less).
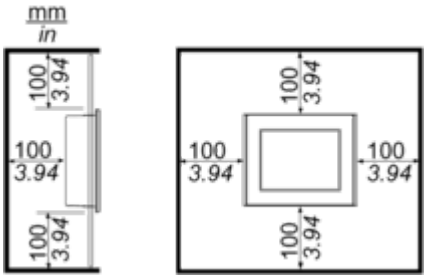
## Clearance