Product data sheet

Specifications

Green Premium™

advanced touchscreen panel, Harmony GTO, 800 x 480pixels WVGA, 7.0inch TFT, 96MB

HMIGTO3510

Product availability: Stock - Normally stocked in distribution facility

Price*: 2,100.00 USD

Main

Range Of Product	Harmony GTO
Product Or Component Type	Advanced touchscreen panel
Display Colour	65536 colours
Display Size	7 inch
Supply	External source
Control Button Type	8 operation defined using Vijeo Designer push-button key F1...F8
Operating System	Harmony
Battery Type	Lithium internal RAM 100 days 5 day(s) 10 year(s)

Complementary

Terminal Type	Touchscreen display
Display Type	Backlit colour TFT LCD
Display Resolution	800 x 480 pixels WVGA
Touch Sensitive Zone	1024 x 1024
Touch Panel	Resistive film, 1000000 cycles
Backlight Lifespan	50000 hours white 77 °F (25 °C)
Brightness	16 levels by touch panel 16 levels by software
Character Font	Taiwanese (traditional Chinese) ASCII Chinese (simplified Chinese) Japanese (ANK, Kanji) Korean
[Us] Rated Supply Voltage	24 V DC
Supply Voltage Limits	19.2…28.8 V
Inrush Current	30 A
Maximum Power Consumption In W	8 W when power is not supplied to external devices 5 W when backlight is OFF 5.5 W when backlight is dimmed 12 W

Price is “List Price” and may be subject to a trade discount – check with your local distributor or retailer for actual price.

Disclaimer: This documentation is not intended as a substitute for and is not to be used for determining suitability or reliability of these products for specific user applications

Local Signalling	Status LED green, steady offline Status LED green, steady operating Status LED orange, flashing software starting up Status LED red, steady power supply (ON) Status LED clear, faded power supply (OFF) COM2 LED yellow, steady data is being transmitted COM2 LED yellow, faded no data transmission SD card LED green, steady card is inserted SD card LED green, faded card is not inserted or is not being accessed
Software Designation	Vijeo Designer configuration software >= V6.1
Memory Description	Flash EPROM, 96 MB
Data Backed Up	128 kB internal RAM SRAM)
Data Storage Equipment	SD card, <= 32 GB SDHC card, <= 32 GB
Downloadable Protocols	Schneider Electric Modicon Modbus Schneider Electric Modicon Uni-TE Schneider Electric Modicon Modbus Plus Schneider Electric Modicon FIPWAY Mitsubishi Melsec third party protocols Omron Sysmac third party protocols Rockwell Automation Allen-Bradley third party protocols Siemens Simatic third party protocols Schneider Electric Modicon Modbus TCP
Integrated Connection Type	COM1 serial link SUB-D 9 RS232C 2400...115200 bps COM2 serial link RJ45 RS485 2400...115200 bps COM2 serial link RJ45 RS485 187.5 kbps Siemens MPI Ethernet RJ45 10BASE-T/100BASE-TX Ethernet RJ45 IEEE 802.3 USB 2.0 type A USB 2.0 type mini B
Product Mounting	Flush mounting
Fixing Mode	by 4 screw clamps
Front Material	PPT
Enclosure Material	PPT
Type Of Cooling	Natural convection
Width	8.58 in (218 mm)
Height	6.81 in (173 mm)
Depth	2.36 in (60 mm)
Net Weight	2.65 lb(US) (1.2 kg)

Environment

Standards	UL 508 IEC 61000-6-2 IEC 61131-2
Product Certifications	CE C-tick KCC cULus UKCA UKEX
Ambient Air Temperature For Operation	32…122 °F (0…50 °C)
Ambient Air Temperature For Storage	-4…140 °F (-20…60 °C)
Relative Humidity	10…90 % without condensation
Operating Altitude	< 6561.68 ft (2000 m)
Ip Degree Of Protection	IP20 IEC 60529 rear panel) IP65 IEC 60529 front panel)

Nema Degree Of Protection	NEMA 4X front panel (indoor use)
Shock Resistance	147 m/s² 3 chocks in each direction X, Y and Z IEC 61131-2
Vibration Resistance	3.5 mm 5…9 Hz) - X, Y, Z directions for 10 cycles (approx. 100 min) - IEC 61131-2 1 gn 9…150 Hz) - X, Y, Z directions for 10 cycles (approx. 100 min) - IEC 61131-2
Resistance To Electrostatic Discharge	6 kV contact discharge IEC 61000-4-2 level 3

Ordering and shipping details

Category	US10MC222569
Discount Schedule	0MC2
Gtin	3595864150260
Returnability	Yes
Country Of Origin	ID

Packing Units

Unit Type Of Package 1	PCE
Number Of Units In Package 1	1
Package 1 Height	5.71 in (14.5 cm)
Package 1 Width	10.55 in (26.8 cm)
Package 1 Length	11.97 in (30.4 cm)
Package 1 Weight	3.44 lb(US) (1.56 kg)
Unit Type Of Package 2	P12
Number Of Units In Package 2	48
Package 2 Height	41.34 in (105 cm)
Package 2 Width	31.50 in (80 cm)
Package 2 Length	47.24 in (120 cm)
Package 2 Weight	169.32 lb(US) (76.8 kg)

Contractual warranty

Warranty	18 months

Sustainability

Green Premium™ label is Schneider Electric's commitment to delivering products with best-in-class environmental performance. Green Premium promises compliance with the latest regulations, transparency on environmental impacts, as well as circular and low-CO_2 products.

Guide to assessing product sustainability is a white paper that clarifies global eco-label standards and how to interpret environmental declarations.

Learn more about Green Premium >

Guide to assess a product's sustainability >

Transparency RoHS/REACh

Well-being performance

Mercury Free

Rohs Exemption Information	Yes

Certifications & Standards

Reach Regulation	REACh Declaration
Eu Rohs Directive	Pro-active compliance (Product out of EU RoHS legal scope)
China Rohs Regulation	China RoHS declaration
Environmental Disclosure	Product Environmental Profile
Weee	The product must be disposed on European Union markets following specific waste collection and never end up in rubbish bins.
Circularity Profile	End of Life Information
California Proposition 65	WARNING: This product can expose you to chemicals including: Lead and lead compounds, which is known to the State of California to cause cancer and birth defects or other reproductive harm. For more information go to www.P65Warnings.ca.gov

Dimensions Drawings

Dimensions

External Dimensions

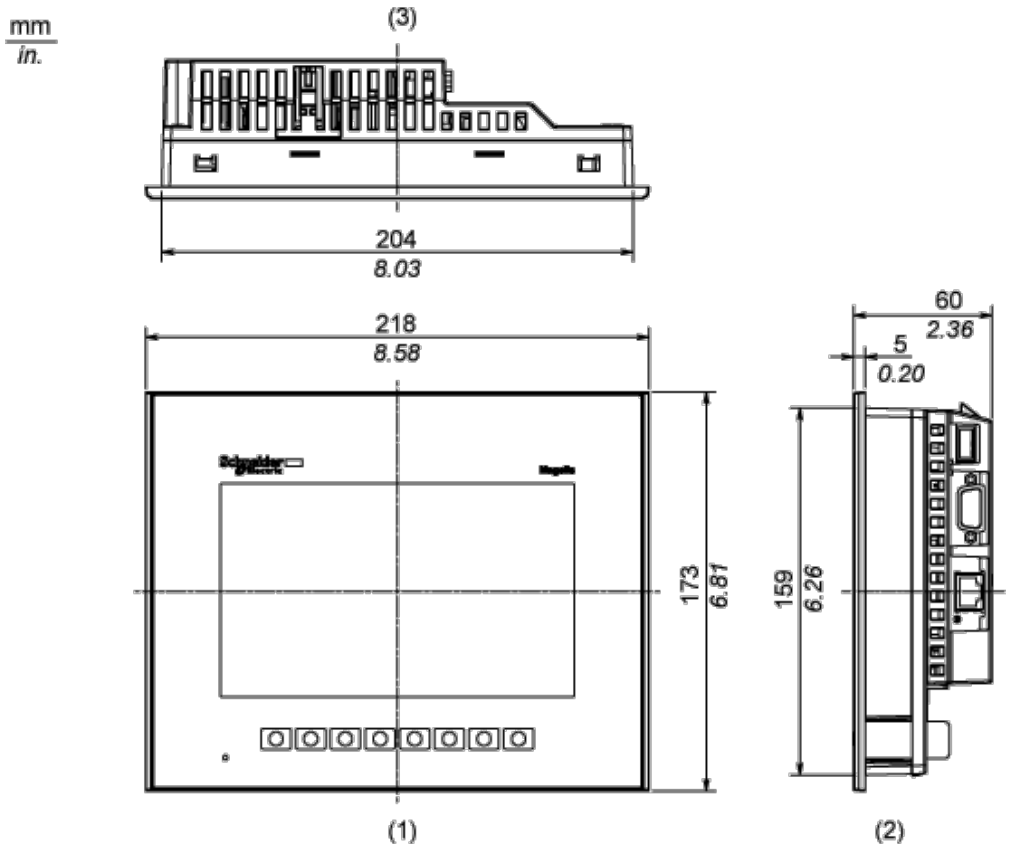

1 Front

2 Right Side

3 Top

Installation with Installation Fasteners

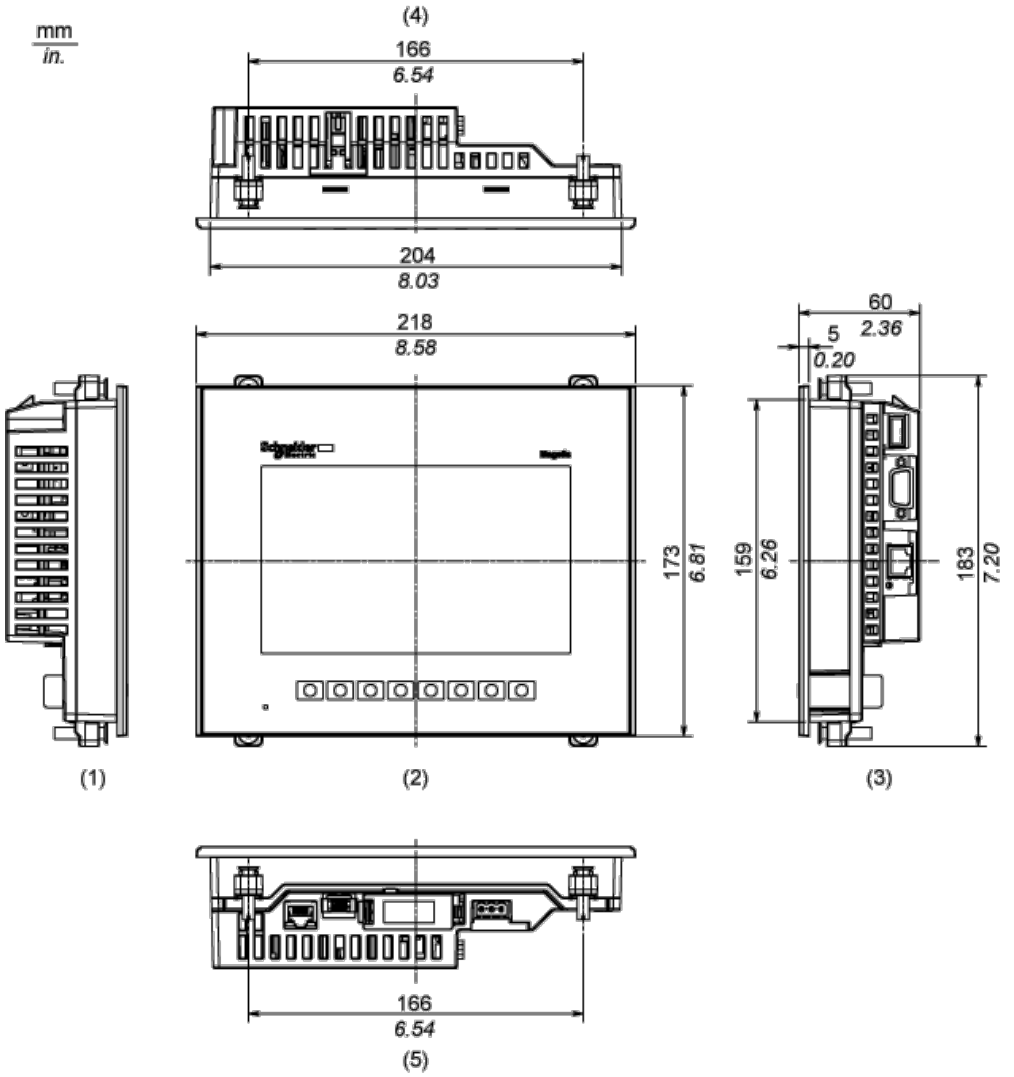

1 Left Side

2 Front

3 Right Side

4 Top

5 Bottom

Dimensions with Cables

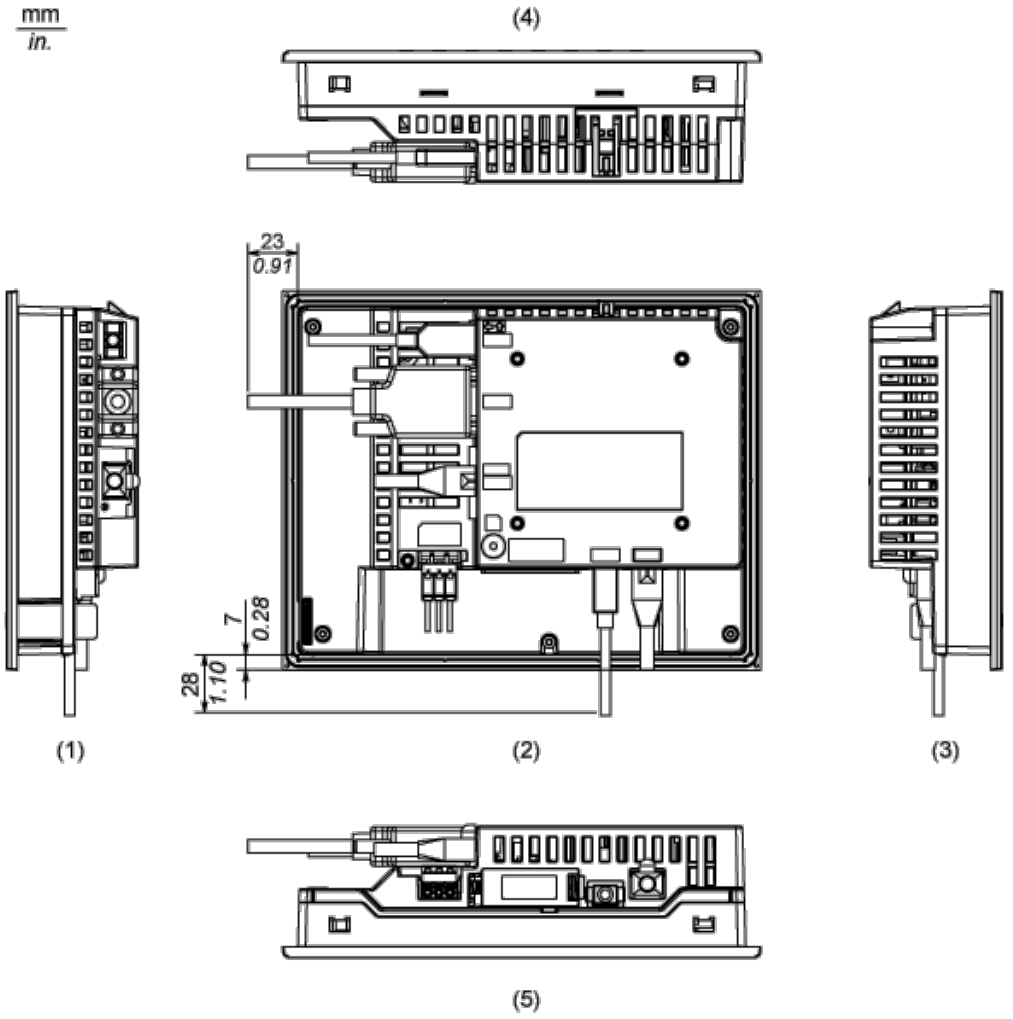

1 Left Side

2 Rear

3 Right Side

4 Top

5 Bottom

Mounting and Clearance

Mounting

Panel Cut Dimensions

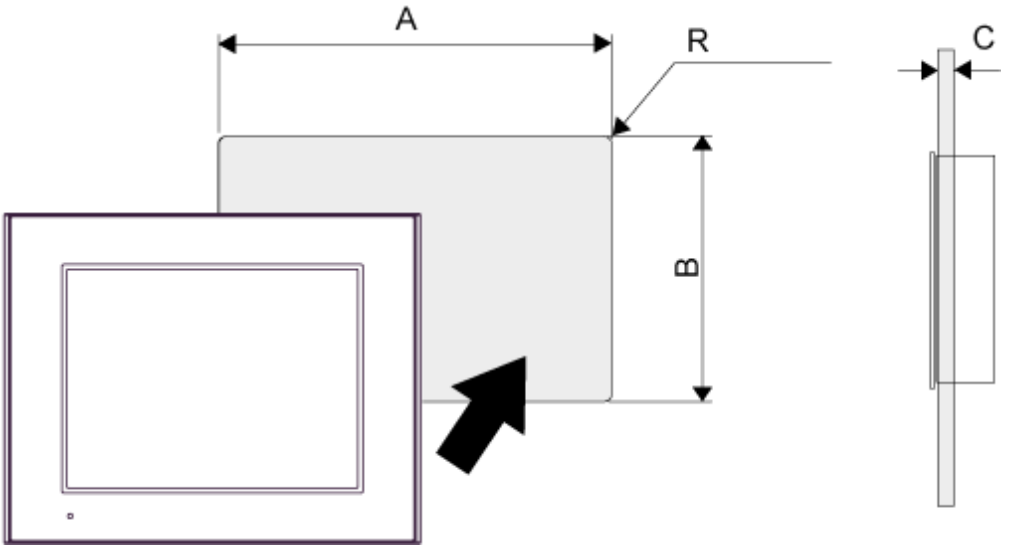

A		B		C		R	
mm	in.	mm	in.	mm	in.	mm	in.
204.5 (+1, -0)	8.05 (+0.04, -0)	159.5 (+1, -0)	6.28 (+0.04, -0)	1.6...5	0.06...0.2	3 max.	0.12 max.

Installation Fastener Dimensions

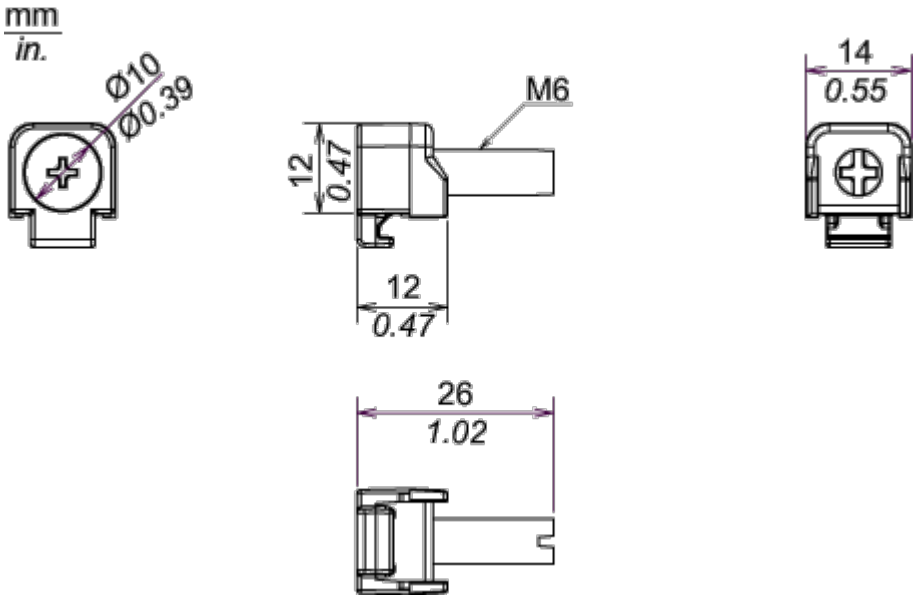

Installation Requirements

Mounting Angle

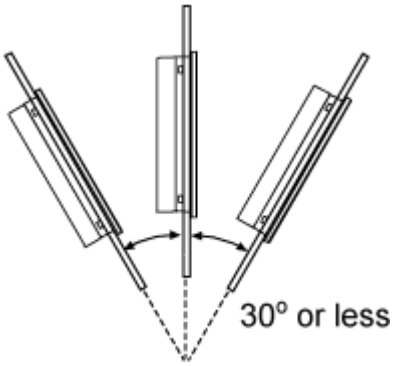

When installing the panel in a slanted position with an incline more than 30°, the ambient temperature must not exceed 40 °C (104 °F). You may need to use forced air cooling (fan,A/C) to ensure the ambient operating temperature is 40°C or less (104 °F or less).
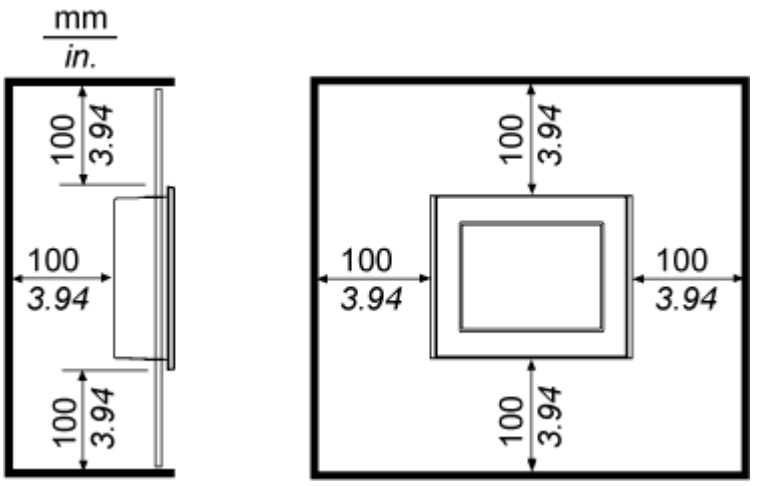
Clearance