Product data sheet

Specifications

Green Premium™

touch panel screen, Harmony ST6, 4inch wide display, 1COM, 1Ethernet, USB host and device, 24V DC

HMIST6200

Product availability: Stock - Normally stocked in distribution facility

Price*: 415.00 USD

Main

Range Of Product	Harmony ST6
Product Or Component Type	Touch panel screen
Processor Name	ARM Cortex-A8

Complementary

Display Size	4 inch
Display Type	Colour TFT LCD
Display Colour	16 million colours
Display Resolution	480 x 272 pixels
Touch Panel	Single touch analogue resistive
Backlight Lifespan	50000 hours white
Brightness	16 levels
Character Font	ASCII ASCII (European characters) Chinese (simplified Chinese) Japanese (ANK, Kanji) Katakana Korean Taiwanese (traditional Chinese)
[Us] Rated Supply Voltage	24 V DC +/- 20 %)
Inrush Current	30 A
Local Signalling	Status LED green, steady offline Status LED green, steady operating Status LED green, flashing operating Status LED green, faded stand-by Status LED orange, flashing software starting up Status LED red, steady power supply (ON) Status LED red, flashing operating Status LED red, off power supply (OFF)
Power Consumption In W	6.9 W
Number Of Pages	200 application pages
Software Package	EcoStruxure Operator Terminal Expert
Processor Frequency	800 MHz
Port Ethernet	10/100BASE

Price is “List Price” and may be subject to a trade discount – check with your local distributor or retailer for actual price.

Disclaimer: This documentation is not intended as a substitute for and is not to be used for determining suitability or reliability of these products for specific user applications

Memory Description	512 MB device memory 128 MB user data memory 512 KB backup memory
Integrated Connection Type	1 COM1 serial link - 1 SUB-D 9-pin female - RS232C/RS485 2400...115200 bps)bottom COM1 serial link 2400...187500 bps)back 1 USB 2.0 type Aback 1 USB 2.0 type micro Bbottom 1 Ethernet - female RJ45 - RS485
Supply	External supply
Realtime Clock	Built-in 0...50 °C Built-in 10...90 % RH
Downloadable Protocols	Modbus Uni-TE Third party protocols
Product Brand	Schneider Electric Modicon Mitsubishi Melsec Omron Sysmac Rockwell Automation Allen-Bradley Siemens Simatic
Fixing Mode	By 2 screws 1.6...5 mm thick panel UL 61010-2-201 By 2 screws IEC 61131-2 By 2 screws IEC 61000-6-2
Enclosure Material	PC
Front Material	Aluminium
Marking	CE
Cut-Out Dimensions	118.5 x 92.5 mm panel cut dimension
Height	4.27 in (108.5 mm)
Width	5.30 in (134.5 mm)
Depth	1.69 in (43 mm)
Net Weight	0.88 lb(US) (0.4 kg)

Environment

Immunity To Microbreaks	2 ms
Standards	IEC 61000-6-4 IEC 61000-6-2 IEC 61131-2 UL 61010-2-201 CSA C22.2 No 61010-2-201
Product Certifications	CSA CE UKCA
Directives	2014/35/EU - low voltage directive 2014/30/EU - electromagnetic compatibility
Ambient Air Temperature For Operation	32…122 °F (0…50 °C)
Ambient Air Temperature For Storage	-4…140 °F (-20…60 °C)
Relative Humidity	10…90 % non-condensing
Operating Altitude	6561.68 ft (2000 m)
Ip Degree Of Protection	IP20 IEC 61131-2 rear panel) IP65 IEC 61131-2 front panel)
Nema Degree Of Protection	NEMA 4 front panel (indoor use) NEMA 13 front panel (in enclosure)
Shock Resistance	147 m/s² 11 ms X, Y, Z directions for 10 cycles (approx. 100 min))IEC 61131-2

Vibration Resistance	+/- 3.5 mm 5…9 Hz) X, Y, Z directions for 10 cycles (approx. 100 min) IEC 61131-2 9.8 m/s² 9…150 Hz)
Electromagnetic Compatibility	Electrical fast transient/burst immunity test - test level: 2 kV (power ports) conforming to IEC 61000-4-4 Electrical fast transient/burst immunity test - test level: 1 kV (signal ports) Electrostatic discharge immunity test - test level: 6 kV (contact discharge) conforming to IEC 61000-4-2 level 3 Electrostatic discharge immunity test - test level: 8 kV (air discharge)

Ordering and shipping details

Category	US10MC222565
Discount Schedule	0MC2
Gtin	3606489523374
Returnability	Yes
Country Of Origin	ID

Packing Units

Unit Type Of Package 1	PCE
Number Of Units In Package 1	1
Package 1 Height	3.19 in (8.100 cm)
Package 1 Width	5.39 in (13.700 cm)
Package 1 Length	7.32 in (18.600 cm)
Package 1 Weight	15.91 oz (451.000 g)
Unit Type Of Package 2	S03
Number Of Units In Package 2	12
Package 2 Height	11.81 in (30.000 cm)
Package 2 Width	11.81 in (30.000 cm)
Package 2 Length	15.75 in (40.000 cm)
Package 2 Weight	12.93 lb(US) (5.864 kg)

Sustainability

Green Premium™ label is Schneider Electric's commitment to delivering products with best-in-class environmental performance. Green Premium promises compliance with the latest regulations, transparency on environmental impacts, as well as circular and low-CO_2 products.

Guide to assessing product sustainability is a white paper that clarifies global eco-label standards and how to interpret environmental declarations.

Learn more about Green Premium >

Guide to assess a product's sustainability >

Transparency RoHS/REACh

Well-being performance

Rohs Exemption Information	Yes

Certifications & Standards

Reach Regulation	REACh Declaration
Eu Rohs Directive	Pro-active compliance (Product out of EU RoHS legal scope)
China Rohs Regulation	China RoHS declaration
Environmental Disclosure	Product Environmental Profile
Weee	The product must be disposed on European Union markets following specific waste collection and never end up in rubbish bins.
California Proposition 65	WARNING: This product can expose you to chemicals including: Lead and lead compounds, which is known to the State of California to cause cancer and birth defects or other reproductive harm. For more information go to www.P65Warnings.ca.gov

Dimensions Drawings

Dimensions

External Dimensions

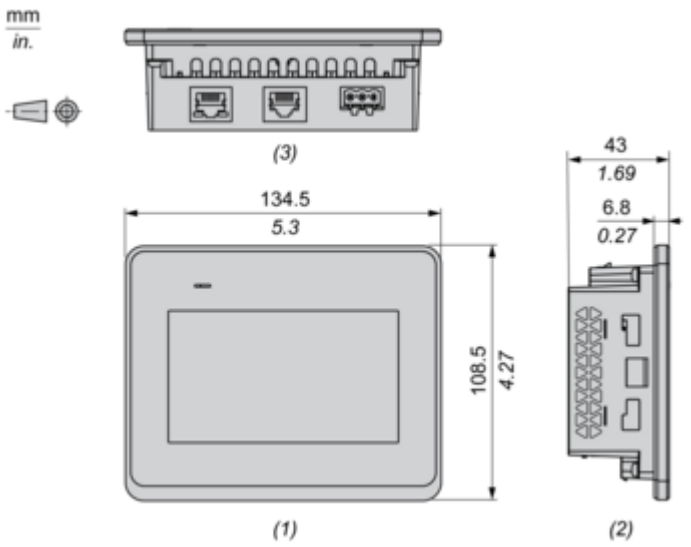

(1) : Front
(2) : Left
(3) : Bottom

Dimensions with Installation Fasteners

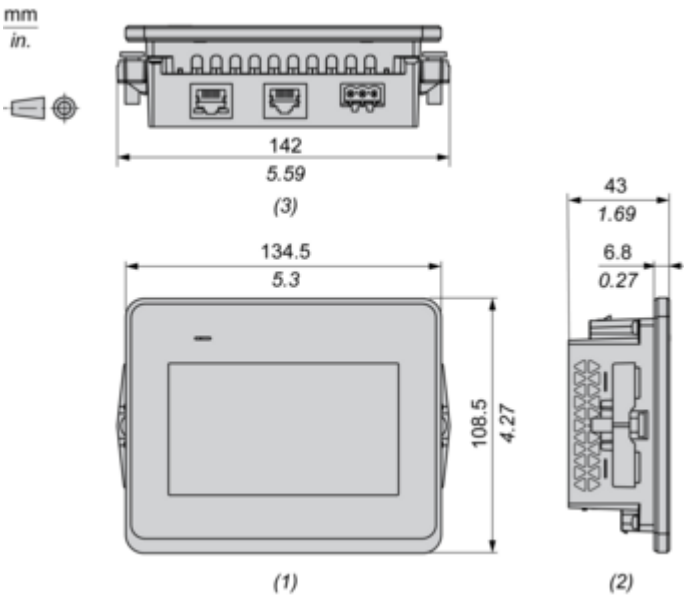

(1) : Front
(2) : Left
(3) : Bottom

Dimensions with Spring Clips

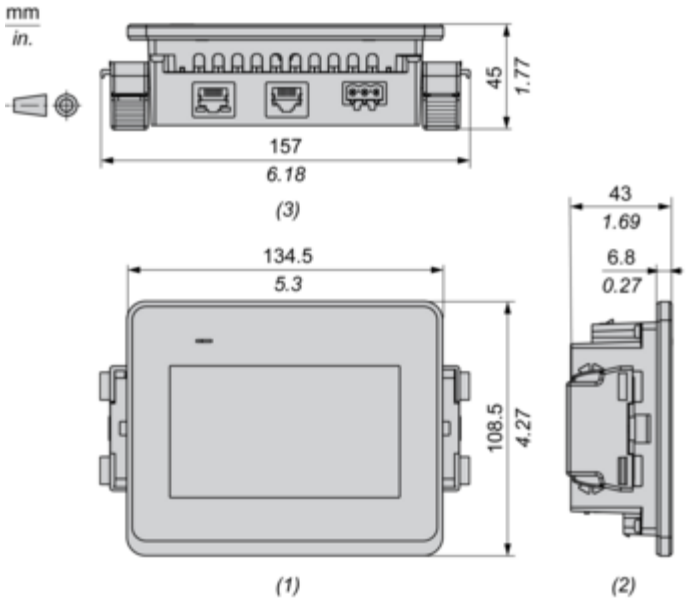

(1) : Front
(2) : Left
(3) : Bottom

Dimensions with Cables

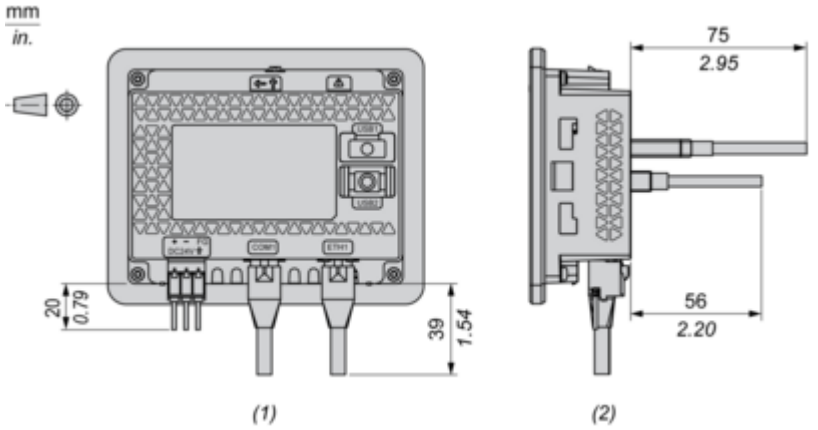

(1) : Rear
(2) : Right

Mounting and Clearance

Mounting

Panel Cut Dimensions

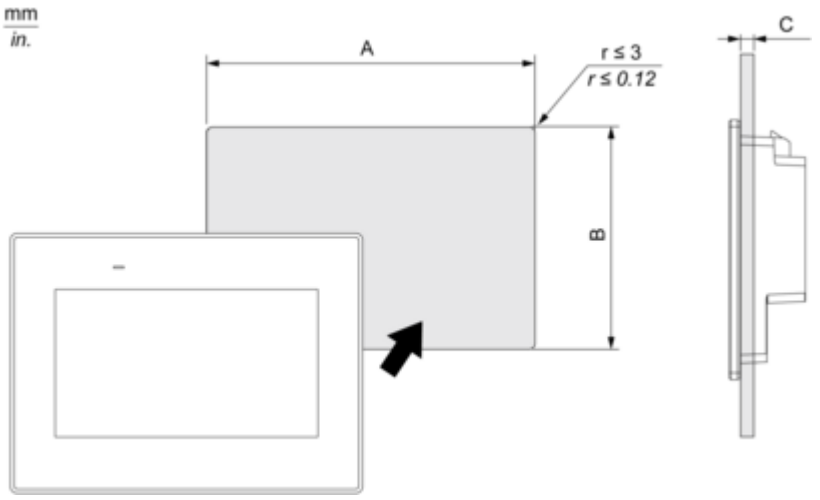

A		B		C Installing with spring			
				Position 1		**Position 2**	
mm	in.	mm	in.	mm	in.	mm	in.
118.5 (+1, -0)	4.67 (+0.04, -0)	92.5 (+1, -0)	3.64 (+0.04, -0)	1.5...4	0.06...0.16	4...6	0.16...0.24

Installation Requirements

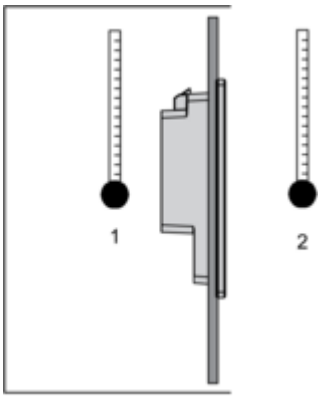

1 : Internal temperature
2 : External temperature

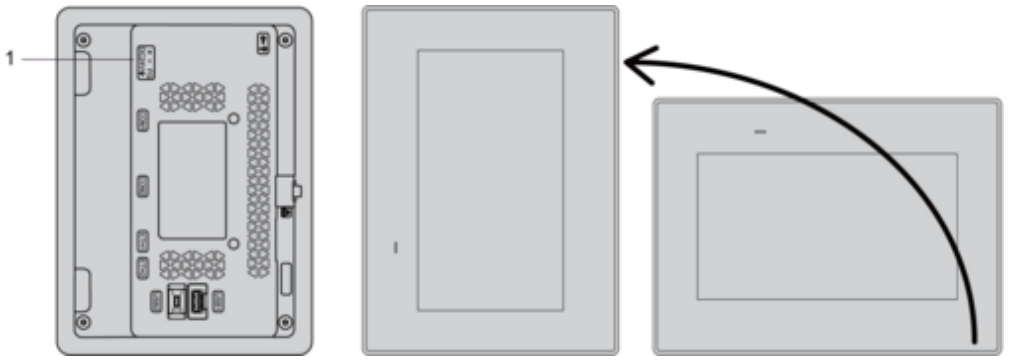

1 : Power connector

Mounting Angle

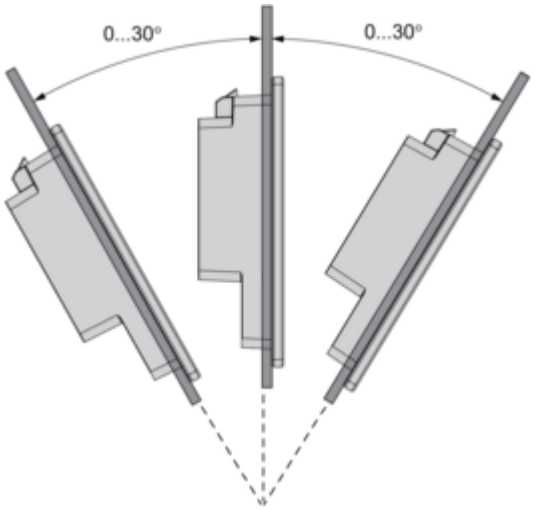

Clearance

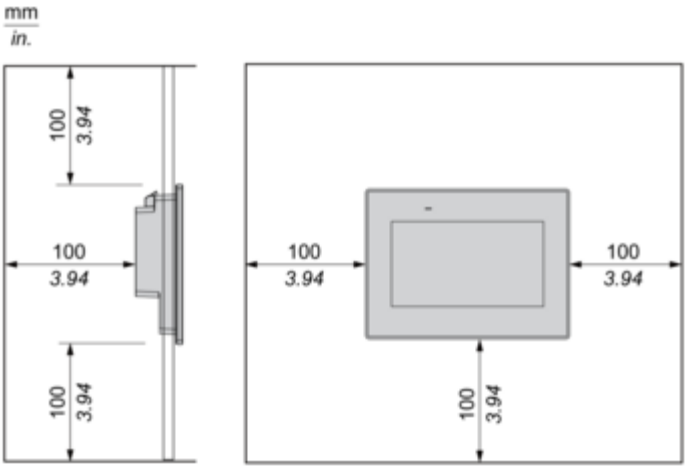
mm
in.
100
3.94
100
3.94
100
3.94
100
3.94
100
3.94
100
3.94