Product data sheet

Specifications

Green Premium™

Touch panel screen, Harmony STO & STU, 3"4 monochrome G/O/R

HMISTO511

Discontinued on: Feb 26, 2021

End-of-service on: Dec 28, 2023

Discontinued

Product availability: Non-Stock - Not normally stocked in distribution facility

Main

Range Of Product	Harmony STO & STU
Product Or Component Type	Touch panel screen
Software Designation	Vijeo Designer
Operating System	Harmony
Processor Name	CPU RISC

Complementary

Display Size	3.4 inch
Display Type	Backlit monochrome STN LCD
Background Colour	Green, orange and red
Display Resolution	200 x 80 pixels
Touch Panel	Analogue
Backlight Lifespan	10000 hours red 50000 hours orange 50000 hours green
Brightness	8 levels
Contrast	16 levels via touch panel
Character Font	Japanese (ANK, Kanji) Korean Chinese (simplified Chinese) ASCII Taiwanese (traditional Chinese)
[Us] Rated Supply Voltage	24 V DC +/- 20 %
Inrush Current	30 A
Local Signalling	for normal operation 1 LED (green)
Power Consumption In W	5 W
Number Of Pages	Limited by internal memory capacity
Processor Frequency	333 MHz
Memory Description	Application memory 16 MB Back up of data 128 kB

Price is “List Price” and may be subject to a trade discount – check with your local distributor or retailer for actual price.

Disclaimer: This documentation is not intended as a substitute for and is not to be used for determining suitability or reliability of these products for specific user applications

Integrated Connection Type	1 USB 2.0 type mini B 1 USB 2.0 type A power supply - removable screw terminal block COM1 serial link - female RJ45 - RS232C/RS485 <= 115.2 kbits/s)
Supply	External source
Realtime Clock	Access to the PLC real-time clock
Downloadable Protocols	Uni-TE Third party protocols Modbus
Fixing Mode	By 2 spring clips 1.6...5 mm thick panel
Enclosure Material	PPT
Marking	CE
Height	3.05 in (77.5 mm)
Width	4.59 in (116.5 mm)
Depth	1.44 in (36.5 mm)

Environment

Immunity To Microbreaks	3 ms
Standards	EN 61131-2 IEC 61000-6-2 UL 508 UL 1604 FCC Class A
Product Certifications	C-tick CE UL Class 1 Division 2 T5 GOST UL Class 1 Division 2 T4A cULus
Ambient Air Temperature For Operation	32…122 °F (0…50 °C)
Ambient Air Temperature For Storage	-4…140 °F (-20…60 °C)
Relative Humidity	0…90 % without condensation
Operating Altitude	<= 6561.68 ft (2000 m)
Ip Degree Of Protection	IP20 IEC 60529 rear panel) IP65 IEC 60529 front panel)
Nema Degree Of Protection	NEMA 4X front panel (indoor use)
Shock Resistance	15 gn 11 msIEC 60068-2-27
Vibration Resistance	+/- 3.5 mm 5…9 Hz) IEC 60068-2-6 1 gn 9…150 Hz) IEC 60068-2-6
Electromagnetic Compatibility	Resistance to radiated electromagnetic fields - test level: 10 V/m conforming to IEC 61000-4-3

Ordering and shipping details

Category	US10MC222569
Discount Schedule	0MC2
Gtin	3595864089690
Returnability	No
Country Of Origin	CN

Packing Units

Unit Type Of Package 1	PCE
Number Of Units In Package 1	1
Package 1 Height	3.54 in (9.0 cm)
Package 1 Width	5.12 in (13.0 cm)
Package 1 Length	7.28 in (18.5 cm)
Package 1 Weight	12.70 oz (360.0 g)

Contractual warranty

Warranty	18 months

Sustainability

Green Premium™ label is Schneider Electric's commitment to delivering products with best-in-class environmental performance. Green Premium promises compliance with the latest regulations, transparency on environmental impacts, as well as circular and low-CO_2 products.

Guide to assessing product sustainability is a white paper that clarifies global eco-label standards and how to interpret environmental declarations.

Learn more about Green Premium >

Guide to assess a product's sustainability >

Transparency RoHS/REACh

Well-being performance

- Reach Free Of Svhc
- Mercury Free
- Rohs Exemption Information — Yes

Certifications & Standards

Reach Regulation	REACh Declaration
Eu Rohs Directive	Pro-active compliance (Product out of EU RoHS legal scope)
China Rohs Regulation	China RoHS declaration
Environmental Disclosure	Product Environmental Profile
Weee	The product must be disposed on European Union markets following specific waste collection and never end up in rubbish bins.
Circularity Profile	End of Life Information
California Proposition 65	WARNING: This product can expose you to chemicals including: Lead and lead compounds, which is known to the State of California to cause cancer and birth defects or other reproductive harm. For more information go to www.P65Warnings.ca.gov

Dimensions Drawings

Dimensions with Spring Clips

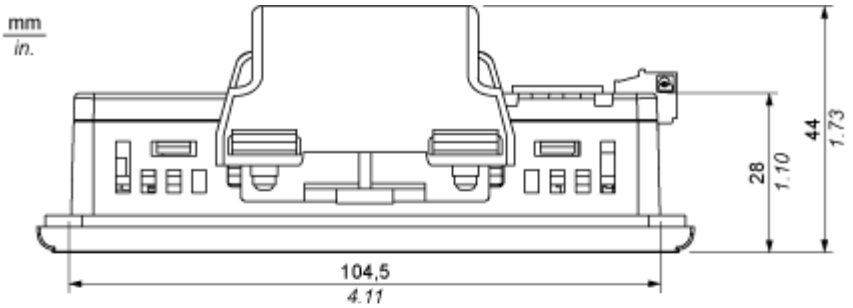

(1)

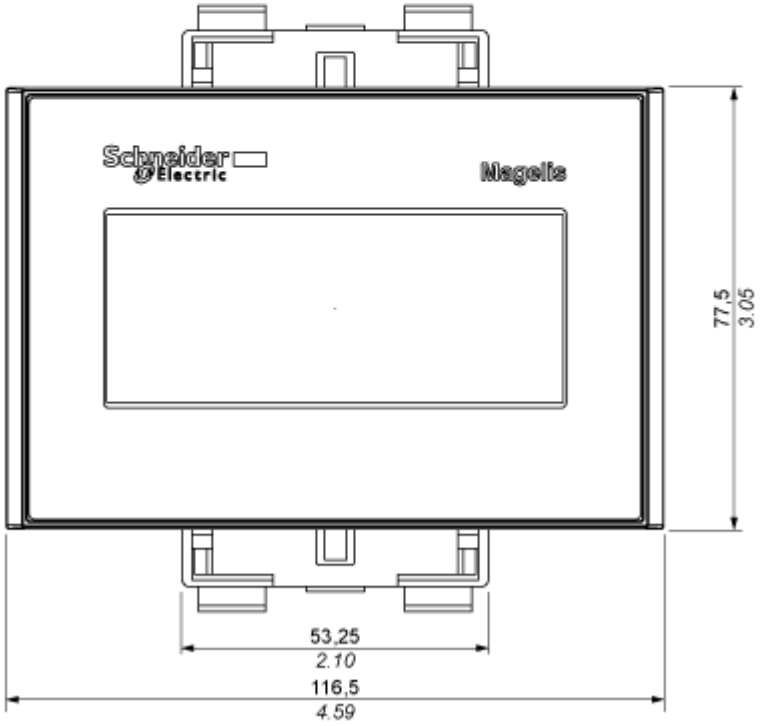

(2)

(1) Top

(2) Front

Dimensions without Spring Clips

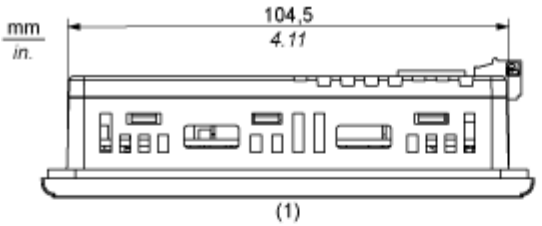

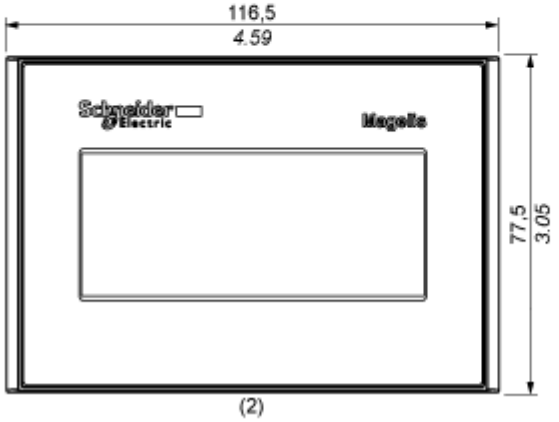

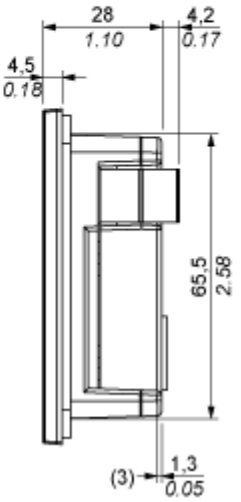

(1) Top

(2) Front

(3) Right Side

Mounting and Clearance

Clearance

mm
in.

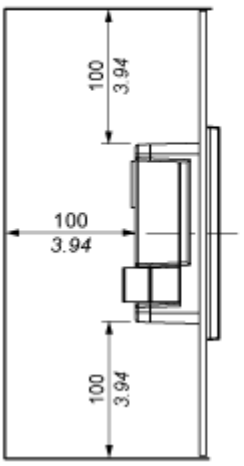

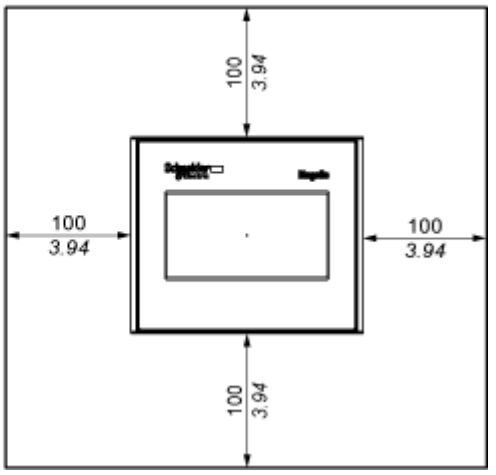

Panel Cut-out Dimensions

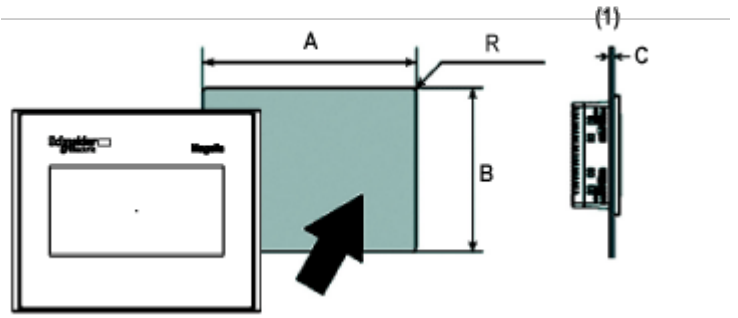

(1) Panel

A (mm)	A (in.)	B (mm)	B (in.)	C (mm) Spring Clips	C (in.) Spring Clips	R (mm)	R (in.)
+1 105 -0	+0.04 4.13 -0	+1 66 -0	+0.04 2.59 -0	1.5 to 6.0	0.059 to 0.236	2.0 to 3.0	0.078 to 0.118