Product data sheet

Specifications

Discontinued

Safety switch, heavy duty, non fusible, 30A, 3 wire, 3 pole, 30hp, 600VAC/DC, NEMA 12, interlock kit

HU361AWKEI

Discontinued on: Jun 23, 2023

Product availability: Stock - Normally stocked in distribution facility

Main

Product	Single Throw Safety Switch
Duty Rating	Heavy duty
Device Application	Heavy application
Disconnect Type	Non-fusible disconnect
Factory Installed Neutral	None
Phase	3 phase
Number Of Poles	3
Current Rating	30 A
Voltage Rating	600 V AC/DC
Enclosure Rating	NEMA 3R/12
Motor Power Hp	5 hp at 240 V AC 50-60 Hz for 1 phase motors 10 hp at 240 V AC 50-60 Hz for 3 phase motors 7.5 hp at 480 V AC 50-60 Hz for 1 phase motors 20 hp at 480 V AC 50-60 Hz for 3 phase motors 10 hp at 600 V AC 50-60 Hz for 1 phase motors 30 hp at 600 V AC 50-60 Hz for 3 phase motors 5 hp at 250 V DC 15 hp at 600 V DC

Complementary

Mounting Type	Surface
Wiring Configuration	3-wire
Wire Size	AWG 12...AWG 6 aluminium AWG 14...AWG 6 copper
Tightening Torque	45 lbf.in (5.08 N.m) 0.02 in² (13.3 mm²) (AWG 6) 40 lbf.in (4.52 N.m) 0.01 in² (8.367 mm²) (AWG 8) 35 lbf.in (3.95 N.m) 0.00…0.01 in² (2.06…5.261 mm²) (AWG 14...AWG 10)
Depth	4.96 in (125.98 mm)
Width	7.55 in (191.77 mm)
Height	14.6 in (370.84 mm)
Net Weight	11.02 lb(US) (5 kg)

Environment

Certifications	UL listed file E2875

Price is “List Price” and may be subject to a trade discount – check with your local distributor or retailer for actual price.

Disclaimer: This documentation is not intended as a substitute for and is not to be used for determining suitability or reliability of these products for specific user applications

Ordering and shipping details

Category	US10DE100113
Discount Schedule	0DE1
Gtin	785901156536
Returnability	Yes
Country Of Origin	US

Packing Units

Unit Type Of Package 1	PCE
Number Of Units In Package 1	1
Package 1 Height	5.40 in (13.716 cm)
Package 1 Width	7.80 in (19.812 cm)
Package 1 Length	17.50 in (44.45 cm)
Package 1 Weight	10.28 lb(US) (4.663 kg)
Unit Type Of Package 2	PAL
Number Of Units In Package 2	96
Package 2 Height	46.50 in (118.11 cm)
Package 2 Width	40.00 in (101.6 cm)
Package 2 Length	48.00 in (121.92 cm)
Package 2 Weight	1019.00 lb(US) (462.21 kg)

Contractual warranty

Warranty	18 months

Sustainability

Green Premium™ label is Schneider Electric's commitment to delivering products with best-in-class environmental performance. Green Premium promises compliance with the latest regulations, transparency on environmental impacts, as well as circular and low-CO_2 products.

Guide to assessing product sustainability is a white paper that clarifies global eco-label standards and how to interpret environmental declarations.

Learn more about Green Premium >

Guide to assess a product's sustainability >

Transparency RoHS/REACh

Well-being performance

Mercury Free	
Rohs Exemption Information	Yes
Pvc Free	

Certifications & Standards

Reach Regulation	REACh Declaration
Eu Rohs Directive	Compliant with Exemptions
China Rohs Regulation	China RoHS declaration Product out of China RoHS scope. Substance declaration for your information.
Environmental Disclosure	Product Environmental Profile
Circularity Profile	No need of specific recycling operations
California Proposition 65	WARNING: This product can expose you to chemicals including: Lead and lead compounds, which is known to the State of California to cause cancer and birth defects or other reproductive harm. For more information go to www.P65Warnings.ca.gov

Dimensions Drawings

Approximate Dimensions

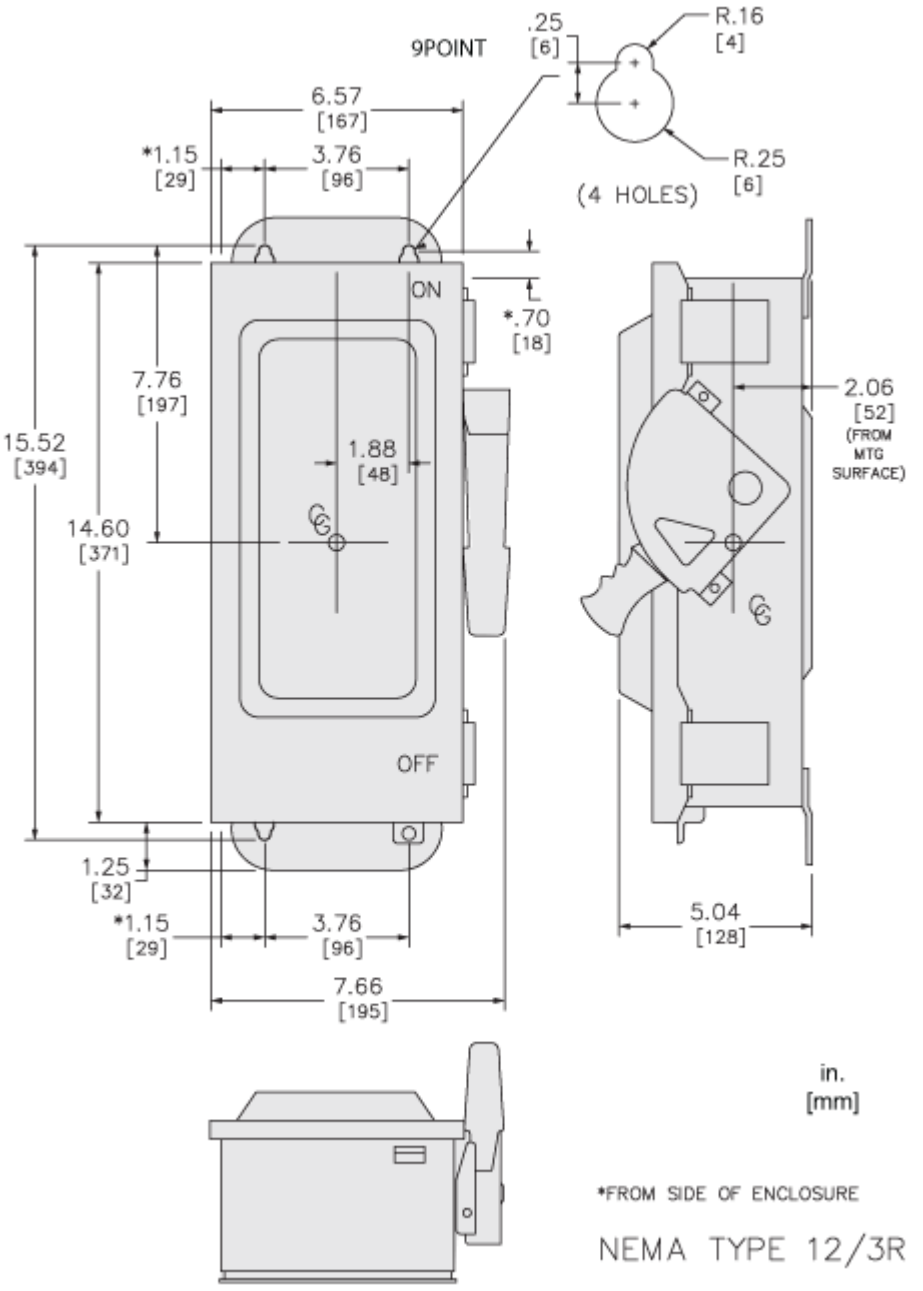

Connections and Schema
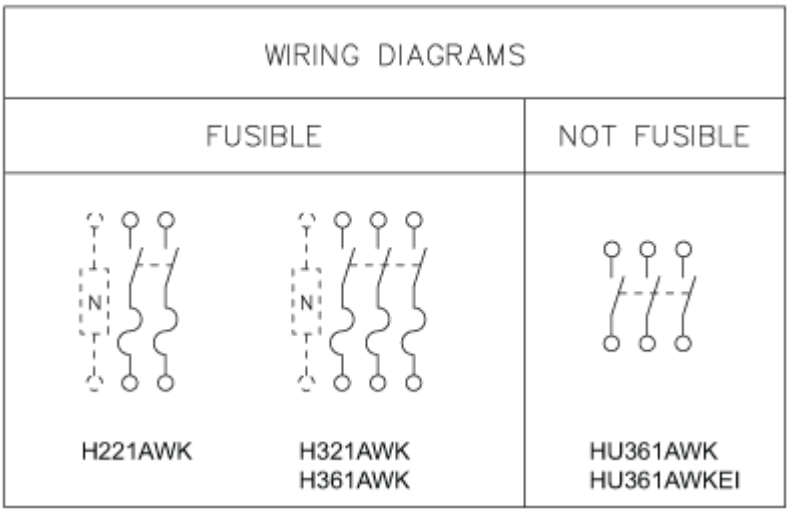
Connections and Wiring Diagrams