Product data sheet

Specifications

Discontinued

Safety switch, heavy duty, non fusible, 200A, 3 pole, 150HP, 600VAC/600VDC, NEMA 4, 4X, 5, 316 stainless steel

HU364SS

Discontinued on: Nov 22, 2023

Product availability: Non-Stock - Not normally stocked in distribution facility

Main

Product	Single Throw Safety Switch
Duty Rating	Heavy duty
Device Application	Heavy application
Disconnect Type	Non-fusible disconnect
Factory Installed Neutral	None
Phase	3 phase
Number Of Poles	3
Current Rating	200 A
Voltage Rating	600 V AC/DC
Enclosure Rating	NEMA 4/4X/5 stainless steel 316
Motor Power Hp	125 hp at 480 V AC 50-60 Hz for 3 phase motors 150 hp at 600 V AC 50-60 Hz for 3 phase motors 50 hp at 600 V DC

Complementary

Mounting Type	Surface
Electrical Connection	Lugs
Wiring Configuration	3-wire
Wire Size	AWG 6...250 kcmil copper or aluminium
Tightening Torque	275 lbf.in (31.07 N.m) 0.02…0.20 in² (13.3…127 mm²) (AWG 6...250 kcmil)
Depth	8.88 in (225.55 mm)
Width	19.25 in (488.95 mm)
Height	29 in (736.60 mm)
Net Weight	54.90 lb(US) (24.9 kg)

Environment

Certifications	UL listed file E2875

Ordering and shipping details

Category	US10DE100010

Price is “List Price” and may be subject to a trade discount – check with your local distributor or retailer for actual price.

Disclaimer: This documentation is not intended as a substitute for and is not to be used for determining suitability or reliability of these products for specific user applications

Discount Schedule	0DE1
Gtin	785901413134
Returnability	Yes
Country Of Origin	US

Packing Units

Unit Type Of Package 1	PCE
Number Of Units In Package 1	1
Package 1 Height	8.20 in (20.828 cm)
Package 1 Width	19.30 in (49.022 cm)
Package 1 Length	30.70 in (77.978 cm)
Package 1 Weight	57.02 lb(US) (25.864 kg)

Contractual warranty

Warranty	18 months

Sustainability

Green Premium™ label is Schneider Electric's commitment to delivering products with best-in-class environmental performance. Green Premium promises compliance with the latest regulations, transparency on environmental impacts, as well as circular and low-CO_2 products.

Guide to assessing product sustainability is a white paper that clarifies global eco-label standards and how to interpret environmental declarations.

Learn more about Green Premium >

Guide to assess a product's sustainability >

Transparency RoHS/REACh

Well-being performance

Reach Free Of Svhc	
Toxic Heavy Metal Free	
Mercury Free	
Rohs Exemption Information	Yes
Pvc Free	

Certifications & Standards

Reach Regulation	REACh Declaration
Eu Rohs Directive	Compliant EU RoHS Declaration
China Rohs Regulation	China RoHS declaration Pro-active China RoHS declaration (out of China RoHS legal scope)
Environmental Disclosure	Product Environmental Profile
Circularity Profile	No need of specific recycling operations
California Proposition 65	WARNING: This product can expose you to chemicals including: Lead and lead compounds, which is known to the State of California to cause cancer and birth defects or other reproductive harm. For more information go to www.P65Warnings.ca.gov

Dimensions Drawings

Approximate Dimensions

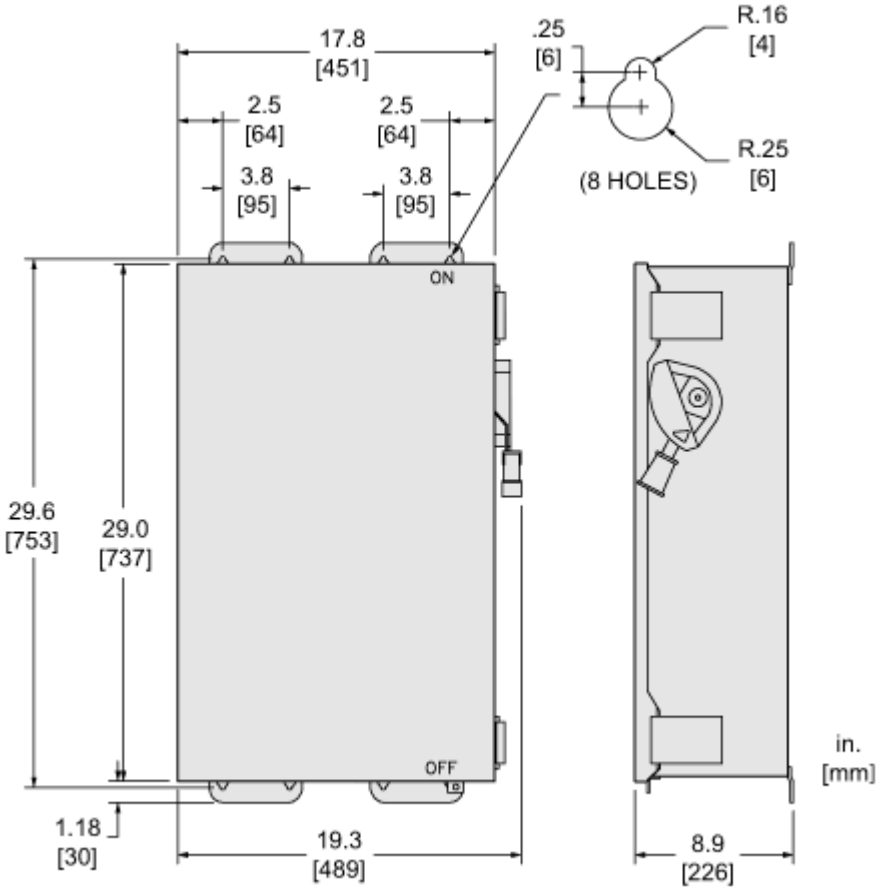

Connections and Schema

Connections and Wiring Diagrams

WIRING DIAGRAMS	
H364SS	HU364SS
FUSIBLE	NOT FUSIBLE
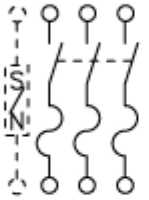	

TERMINAL LUG DATA ‡			
AMPERES	MAX WIRE	MIN WIRE	TYPE
200	250 KCMIL	#6 AWG	CU/AL

‡ LUGS SUITABLE FOR 75°C CONDUCTORS.