Product data sheet

Specifications

Green Premium™

Discontinued

integrated drive ILA with servo motor - 24..36 V - Profibus DP - indus connector

ILA1B571PC1A0

Discontinued on: Sep 15, 2023

To be end-of-service on: Dec 31, 2024

Product availability: Non-Stock - Not normally stocked in distribution facility

Main

Range Of Product	Lexium integrated drive
Product Or Component Type	Motion integrated drive
Device Short Name	ILA
Motor Type	AC Synchronous Servo Motor
Number Of Motor Poles	6
Phase	Single phase
[Us] Rated Supply Voltage	36 V 24 V
Network Type	DC
Communication Interface	Profibus DP, Integrated
Length	5.72 in (145.3 mm)
Winding Type	Medium speed of rotation and medium torque
Electrical Connection	Industrial connector
Holding Brake	Without
Gear Box Type	Without
Nominal Speed	3200 rpm 24 V 5500 rpm 36 V
Nominal Torque	2.30 lbf.in (0.26 N.m)

Complementary

Transmission Rate	9.6, 19.2, 45.45, 93.75, 187.5, 500, 1500, 3000, 6000 and 12000 kbauds
Mounting Support	Flange
Motor Flange Size	2.24 in (57 mm)
Number Of Motor Stacks	1
Centring Collar Diameter	1.97 in (50 mm)
Centring Collar Depth	0.06 in (1.6 mm)
Number Of Mounting Holes	4
Mounting Holes Diameter	0.20 in (5.2 mm)
Circle Diameter Of The Mounting Holes	2.62 in (66.6 mm)

Price is “List Price” and may be subject to a trade discount – check with your local distributor or retailer for actual price.

Disclaimer: This documentation is not intended as a substitute for and is not to be used for determining suitability or reliability of these products for specific user applications

Feedback Type	Single turn encoder
Shaft End	Untapped
Second Shaft	Without second shaft end
Shaft Diameter	0.35 in (9 mm)
Shaft Length	0.79 in (20 mm)
Supply Voltage Limits	18…40 V
Current Consumption	5000 mA maximum continuous 7000 mA peak
Associated Fuse Rating	10 A
Input/Output Type	4 signals (each be used as input or output)
Voltage State 0 Guaranteed	-3...4.5 V
Voltage State 1 Guaranteed	15...30 V
Discrete Input Current	10 mA at 24 V on/STO_A safety input 3 mA at 24 V on/STO_B safety input 2 mA at 24 V 24 V signal interface
Discrete Output Voltage	23...25 V
Maximum Switching Current	100 mA per output 200 mA total
Protection Type	Overload of output voltage Safe torque off Short circuit of the output voltage
Peak Stall Torque	5.31 lbf.in (0.6 N.m)
Continuous Stall Torque	2.30 lbf.in (0.26 N.m)
Speed Feedback Resolution	16384 points/turn
Accuracy Error	+/- 0.05 °
Rotor Inertia	0.1 kg.cm²
Maximum Radial Force Fr	89 N
Maximum Axial Force Fa	104 N force pressure) 104 N tensile force)
Service Life In Hours	20000 h bearing
Marking	CE
Type Of Cooling	Natural convection
Net Weight	3.09 lb(US) (1.4 kg)

Environment

Standards	IEC 61800-3, Ed 2 EN/IEC 50178 EN 61800-3:2001, second environment IEC 60072-1 EN 61800-3 : 2001-02 EN 50347 EN/IEC 61800-3
Product Certifications	cUL TÜV UL
Ambient Air Temperature For Operation	122…149 °F (50…65 °C) with power derating of 2 % per °C) 32…122 °F (0…50 °C) without derating)
Permissible Ambient Air Temperature Around The Device	221 °F (105 °C) power amplifier 230 °F (110 °C) motor

Ambient Air Temperature For Storage	-13…158 °F (-25…70 °C)
Operating Altitude	<= 3280.84 ft (1000 m) without derating
Relative Humidity	15…85 % without condensation
Vibration Resistance	20 m/s² 10…500 Hz) 10 cycles EN/IEC 60068-2-6
Shock Resistance	150 m/s² 1000 shocks EN/IEC 60068-2-29
Ip Degree Of Protection	IP41 shaft bushing: conforming to EN/IEC 60034-5 IP54 total except shaft bushing: conforming to EN/IEC 60034-5

Ordering and shipping details

Category	US1PC5618288
Discount Schedule	PC56
Gtin	3389119225175
Returnability	No
Country Of Origin	DE

Packing Units

Unit Type Of Package 1	PCE
Number Of Units In Package 1	1
Package 1 Height	3.15 in (8.0 cm)
Package 1 Width	7.48 in (19.0 cm)
Package 1 Length	15.35 in (39.0 cm)
Package 1 Weight	3.97 lb(US) (1.8 kg)

Contractual warranty

Warranty	18 months

Sustainability

Green Premium™ label is Schneider Electric's commitment to delivering products with best-in-class environmental performance. Green Premium promises compliance with the latest regulations, transparency on environmental impacts, as well as circular and low-CO_2 products.

Guide to assessing product sustainability is a white paper that clarifies global eco-label standards and how to interpret environmental declarations.

Learn more about Green Premium >

Guide to assess a product's sustainability >

Transparency RoHS/REACh

Well-being performance

Mercury Free	
Rohs Exemption Information	Yes
Pvc Free	

Certifications & Standards

Reach Regulation	REACh Declaration
Eu Rohs Directive	Pro-active compliance (Product out of EU RoHS legal scope)
China Rohs Regulation	China RoHS declaration
Environmental Disclosure	Product Environmental Profile
Weee	The product must be disposed on European Union markets following specific waste collection and never end up in rubbish bins.
Circularity Profile	End of Life Information
California Proposition 65	WARNING: This product can expose you to chemicals including: Lead and lead compounds, which is known to the State of California to cause cancer and birth defects or other reproductive harm. For more information go to www.P65Warnings.ca.gov

Dimensions Drawings

Integrated Drive without Holding Brake

Dimensions

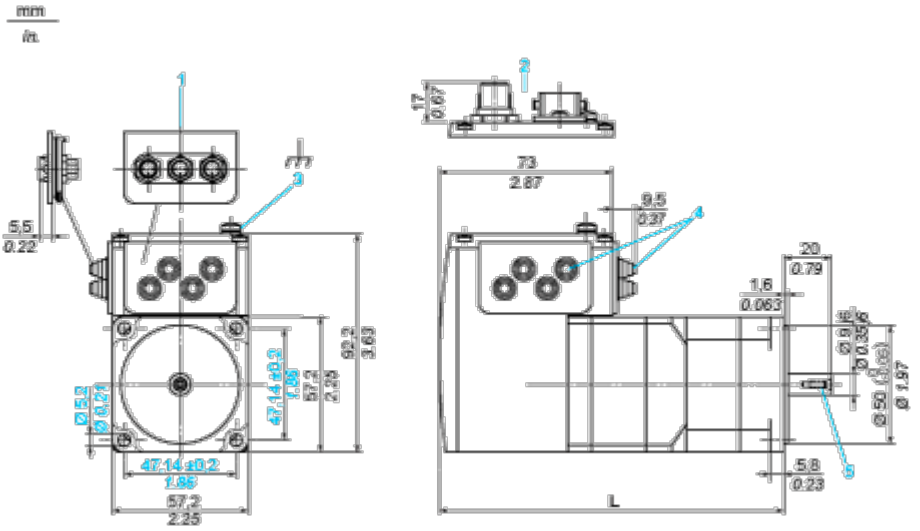

1 Accessories: I/O signal insert with industrial connectors

2 Option: industrial connectors

3 Earth (ground) terminal

4 Accessories: cable entries Ø = 3 ... 9 mm/0.12 ... 0.35 in.

5 Centring hole DIN 332 - DS M3

L 145.3 mm/5.72 in.

Connections and Schema

Connection Example with 4 I/O Signals

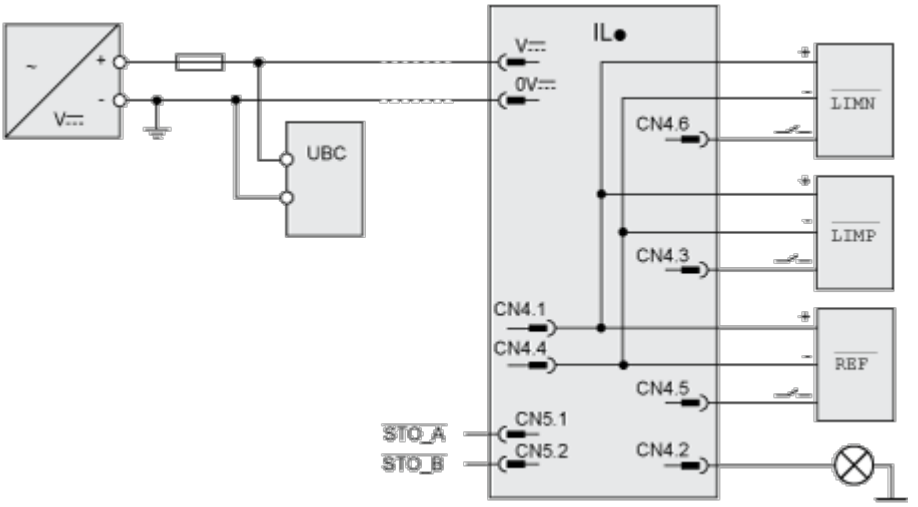

Performance Curves

Torque Characteristics

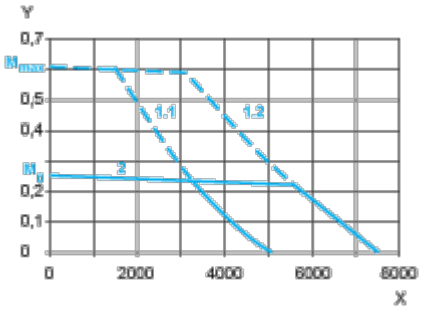

X Speed of rotation in rpm

Y Torque in Nm

1.1 Max. torque at 24 V

1.2 Max. torque at 36 V

2 Continuous torque