Product data sheet

Specifications

integrated drive ILA with servo motor - 24..48 V - Modbus TCP - indus connector

ILA2T572PC1A0

Product availability: Non-Stock - Not normally stocked in distribution facility

Price*: 1,860.00 USD

Main

Range Of Product	Lexium integrated drive
Product Or Component Type	Motion integrated drive
Device Short Name	ILA
Motor Type	AC Synchronous Servo Motor
Number Of Motor Poles	6
Phase	Single phase
[Us] Rated Supply Voltage	48 V 24 V
Network Type	DC
Communication Interface	Modbus TCP, Integrated
Length	6.45 in (163.8 mm)
Winding Type	Medium speed of rotation and medium torque
Electrical Connection	Industrial connector
Holding Brake	Without
Gear Box Type	Without
Nominal Speed	1600 rpm 24 V 3400 rpm 48 V
Nominal Torque	6.90 lbf.in (0.78 N.m)

Complementary

Transmission Rate	10, 100 Mbits
Mounting Support	Flange
Motor Flange Size	2.24 in (57 mm)
Number Of Motor Stacks	2
Centring Collar Diameter	1.97 in (50 mm)
Centring Collar Depth	0.06 in (1.6 mm)
Number Of Mounting Holes	4
Mounting Holes Diameter	0.20 in (5.2 mm)
Circle Diameter Of The Mounting Holes	2.62 in (66.6 mm)
Feedback Type	Single turn encoder
Shaft End	Untapped

Price is “List Price” and may be subject to a trade discount – check with your local distributor or retailer for actual price.

Disclaimer: This documentation is not intended as a substitute for and is not to be used for determining suitability or reliability of these products for specific user applications

Second Shaft	Without second shaft end
Shaft Diameter	0.35 in (9 mm)
Shaft Length	0.79 in (20 mm)
Supply Voltage Limits	18…55.2 V
Current Consumption	7000 mA maximum continuous 8500 mA peak
Associated Fuse Rating	16 A
Commissioning Interface	RS485 Modbus TCP 9.6, 19.2 and 38.4 kbauds)
Input/Output Type	4 signals (each be used as input or output)
Voltage State 0 Guaranteed	-3...4.5 V
Voltage State 1 Guaranteed	15...30 V
Discrete Input Current	10 mA at 24 V safety input 2 mA at 24 V 24 V signal interface
Discrete Output Voltage	23...25 V
Maximum Switching Current	100 mA per output 200 mA total
Protection Type	Overload of output voltage Safe torque off Short circuit of the output voltage
Peak Stall Torque	14.34 lbf.in (1.62 N.m)
Continuous Stall Torque	6.90 lbf.in (0.78 N.m)
Speed Feedback Resolution	16384 points/turn
Accuracy Error	+/- 0.05 °
Rotor Inertia	0.173 kg.cm²
Maximum Radial Force Fr	107 N
Maximum Axial Force Fa	104 N force pressure) 104 N tensile force)
Service Life In Hours	20000 h bearing
Marking	CE
Type Of Cooling	Natural convection
Net Weight	3.75 lb(US) (1.7 kg)

Environment

Standards	IEC 61800-3 IEC 61800-3, Ed 2 IEC 50347 EN 61800-3 : 2001-02 IEC 60072-1 IEC 50178 EN 61800-3:2001, second environment
Product Certifications	UL TÜV cUL
Ambient Air Temperature For Operation	104…131 °F (40…55 °C) with power derating of 2 % per °C) 32…104 °F (0…40 °C) without derating)
Permissible Ambient Air Temperature Around The Device	221 °F (105 °C) power amplifier 230 °F (110 °C) motor
Ambient Air Temperature For Storage	-13…158 °F (-25…70 °C)

Operating Altitude	<= 3280.84 ft (1000 m) without derating
Relative Humidity	15…85 % without condensation
Vibration Resistance	20 m/s² 10…500 Hz) 10 cycles IEC 60068-2-6
Shock Resistance	150 m/s² 1000 shocks IEC 60068-2-29
Ip Degree Of Protection	IP41 shaft bushing: conforming to IEC 60034-5 IP54 total except shaft bushing: conforming to IEC 60034-5

Ordering and shipping details

Category	US1PC5618288
Discount Schedule	PC56
Gtin	3606485187976
Returnability	No
Country Of Origin	US

Packing Units

Unit Type Of Package 1	PCE
Number Of Units In Package 1	1
Package 1 Height	4.53 in (11.5 cm)
Package 1 Width	7.48 in (19.0 cm)
Package 1 Length	15.55 in (39.5 cm)
Package 1 Weight	4.41 lb(US) (2.0 kg)

Contractual warranty

Warranty	18 months

Sustainability

Green Premium™ label is Schneider Electric's commitment to delivering products with best-in-class environmental performance. Green Premium promises compliance with the latest regulations, transparency on environmental impacts, as well as circular and low-CO_2 products.

Guide to assessing product sustainability is a white paper that clarifies global eco-label standards and how to interpret environmental declarations.

Learn more about Green Premium >

Guide to assess a product's sustainability >

Transparency RoHS/REACh

Well-being performance

Mercury Free	
Rohs Exemption Information	Yes
Pvc Free	

Certifications & Standards

Reach Regulation	REACh Declaration
Eu Rohs Directive	Pro-active compliance (Product out of EU RoHS legal scope)
China Rohs Regulation	China RoHS declaration
Environmental Disclosure	Product Environmental Profile
Weee	The product must be disposed on European Union markets following specific waste collection and never end up in rubbish bins.
Circularity Profile	End of Life Information
California Proposition 65	WARNING: This product can expose you to chemicals including: Lead and lead compounds, which is known to the State of California to cause cancer and birth defects or other reproductive harm. For more information go to www.P65Warnings.ca.gov

Dimensions Drawings

Integrated Drive without Holding Brake

Dimensions

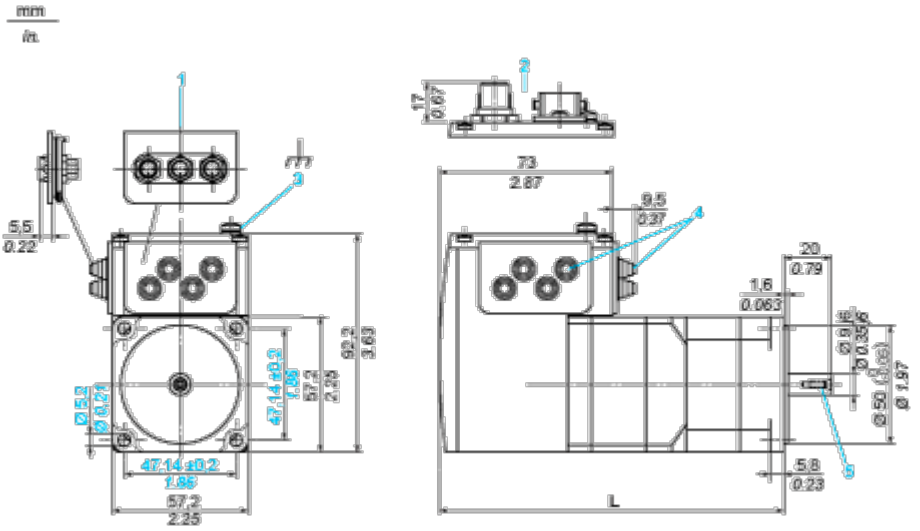

1 Accessories: I/O signal insert with industrial connectors

2 Option: industrial connectors

3 Earth (ground) terminal

4 Accessories: cable entries Ø = 3 ... 9 mm/0.12 ... 0.35 in.

5 Centring hole DIN 332 - DS M3

L 163.8 mm/6.45 in.

Connections and Schema

Connection Example with 4 I/O Signals

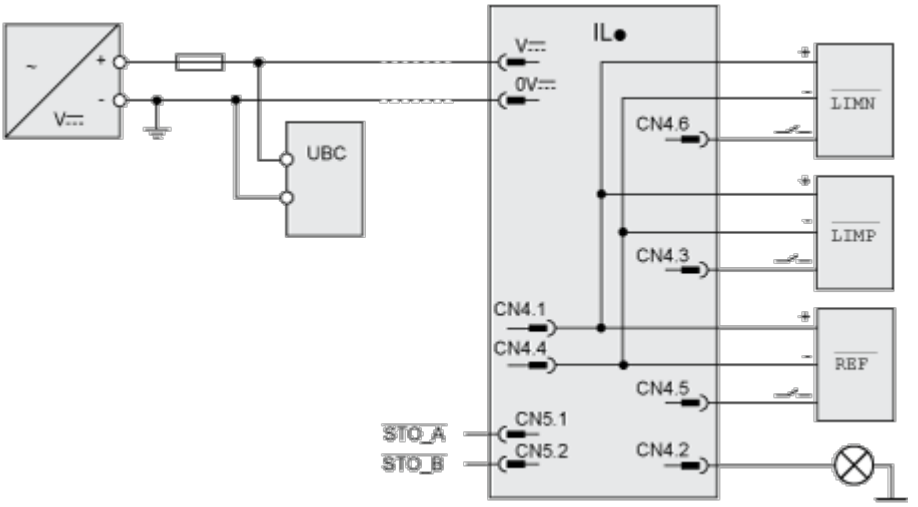

Performance Curves

Torque Characteristics

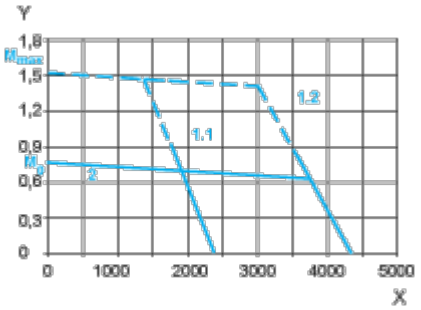

X Speed of rotation in rpm

Y Torque in Nm

1.1 Max. torque at 24 V

1.2 Max. torque at 48 V

2 Continuous torque