Product data sheet

Specifications

Green Premium™

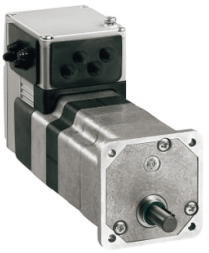

brushless dc motor 24..48 V - DeviceNet interface - L = 174 mm - 24:1

ILE2D661PB1A5

Discontinued on: Aug 7, 2023

To be end-of-service on: Dec 31, 2026

Discontinued - Service only

Product availability: Non-Stock - Not normally stocked in distribution facility

Main

Range Of Product	Lexium integrated drive
Product Or Component Type	Motion integrated drive
Device Short Name	ILE
Motor Type	Brushless DC motor
Number Of Motor Poles	6
Phase	Single phase
[Us] Rated Supply Voltage	48 V 24 V
Network Type	DC
Communication Interface	DeviceNet, Integrated
Length	9.02 in (229 mm)
Winding Type	Medium speed of rotation and medium torque
Electrical Connection	Printed circuit board connector
Holding Brake	Without
Gear Box Type	Worm gear, 2 stages
Reduction Ratio	24:1 (525:22)
Nominal Speed	168 rpm 24 V 168 rpm 48 V
Nominal Torque	33.63 lbf.in (3.8 N.m) 24 V 33.63 lbf.in (3.8 N.m) 48 V

Complementary

Transmission Rate	125, 250, 500 kbauds
Mounting Support	Flange
Motor Flange Size	2.60 in (66 mm)
Number Of Motor Stacks	1
Centring Collar Diameter	1.42 in (36 mm)
Number Of Mounting Holes	2
Mounting Holes Diameter	0.17 in (4.4 mm)
Feedback Type	BLDC encoder

Price is “List Price” and may be subject to a trade discount – check with your local distributor or retailer for actual price.

Disclaimer: This documentation is not intended as a substitute for and is not to be used for determining suitability or reliability of these products for specific user applications

Shaft End	Hole
Second Shaft	Without second shaft end
Supply Voltage Limits	18…55.2 V
Current Consumption	7000 mA peak 5500 mA maximum continuous
Associated Fuse Rating	16 A
Commissioning Interface	RS485 Modbus TCP 9.6, 19.2 and 38.4 kbauds)
Input/Output Type	4 signals (each be used as input or output)
Voltage State 0 Guaranteed	-3...4.5 V
Voltage State 1 Guaranteed	15...30 V
Discrete Input Current	10 mA at 24 V on/STO_A safety input 3 mA at 24 V on/STO_B safety input 2 mA at 24 V 24 V signal interface
Discrete Output Voltage	23...25 V
Maximum Switching Current	100 mA per output 200 mA total
Protection Type	Safe torque off Overload of output voltage Short circuit of the output voltage
Maximum Supply Current	0.1 A power stage disabled) 6.8 A 24 V 3.8 A 48 V
Nominal Output Power	45 W 24 V 66 W 48 V
Peak Stall Torque	54.79 lbf.in (6.19 N.m) 24 V 54.79 lbf.in (6.19 N.m) 48 V
Continuous Stall Torque	37.17 lbf.in (4.2 N.m)
Detent Torque	25.67 lbf.in (2.9 N.m)
Speed Feedback Resolution	12 points/turn motor 1.26° gearbox output
Accuracy Error	+/- 1 point
Rotor Inertia	90 kg.cm²
Maximum Mechanical Speed	186 rpm
Maximum Radial Force Fr	200 N
Maximum Axial Force Fa	80 N
Service Life In Hours	3000 h bearing
Marking	CE
Type Of Cooling	Natural convection
Net Weight	5.07 lb(US) (2.3 kg)

Environment

Standards	EN 61800-3 : 2001-02 EN 50347 EN/IEC 50178 EN/IEC 61800-3 EN 61800-3:2001, second environment IEC 60072-1 IEC 61800-3, Ed 2

Product Certifications	TÜV cUL UL
Ambient Air Temperature For Operation	104…131 °F (40…55 °C) with power derating of 2 % per °C) 32…104 °F (0…40 °C) without derating)
Permissible Ambient Air Temperature Around The Device	221 °F (105 °C) power amplifier 230 °F (110 °C) motor
Ambient Air Temperature For Storage	-13…158 °F (-25…70 °C)
Operating Altitude	<= 3280.84 ft (1000 m) without derating
Relative Humidity	15…85 % without condensation
Vibration Resistance	20 m/s² 10…500 Hz) 10 cycles EN/IEC 60068-2-6
Shock Resistance	150 m/s² 1000 shocks EN/IEC 60068-2-29
Ip Degree Of Protection	IP41 shaft bushing: conforming to EN/IEC 60034-5 IP54 total except shaft bushing: conforming to EN/IEC 60034-5

Ordering and shipping details

Category	US1PC5618288
Discount Schedule	PC56
Gtin	3389119222716
Returnability	No
Country Of Origin	DE

Packing Units

Unit Type Of Package 1	PCE
Number Of Units In Package 1	1
Package 1 Height	3.54 in (9.0 cm)
Package 1 Width	7.48 in (19.0 cm)
Package 1 Length	15.16 in (38.5 cm)
Package 1 Weight	4.96 lb(US) (2.25 kg)

Contractual warranty

Warranty	18 months

Sustainability

Green Premium™ label is Schneider Electric's commitment to delivering products with best-in-class environmental performance. Green Premium promises compliance with the latest regulations, transparency on environmental impacts, as well as circular and low-CO_2 products.

Guide to assessing product sustainability is a white paper that clarifies global eco-label standards and how to interpret environmental declarations.

Learn more about Green Premium >

Guide to assess a product's sustainability >

Transparency RoHS/REACh

Well-being performance

Mercury Free	
Rohs Exemption Information	Yes
Pvc Free	

Certifications & Standards

Reach Regulation	REACh Declaration
Eu Rohs Directive	Pro-active compliance (Product out of EU RoHS legal scope)
China Rohs Regulation	China RoHS declaration
Environmental Disclosure	Product Environmental Profile
Weee	The product must be disposed on European Union markets following specific waste collection and never end up in rubbish bins.
Circularity Profile	End of Life Information
California Proposition 65	WARNING: This product can expose you to chemicals including: Lead and lead compounds, which is known to the State of California to cause cancer and birth defects or other reproductive harm. For more information go to www.P65Warnings.ca.gov

Dimensions Drawings

Integrated Drive with Worm Gear

Dimensions

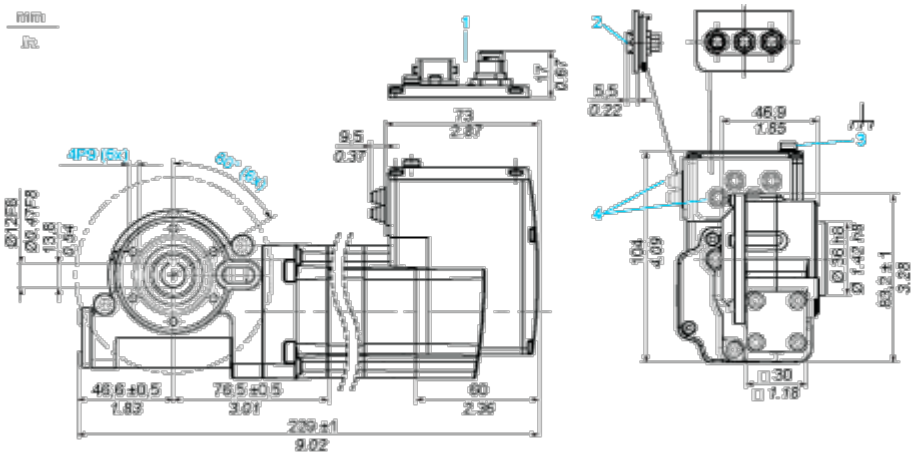

1 Option: industrial connectors

2 Accessories: I/O signal insert with industrial connectors

3 Earth (ground) terminal

4 Accessories: cable entries Ø = 3 ... 9 mm/0.12 ... 0.35 in.

Connections and Schema

Connection Example with 4 I/O Signals

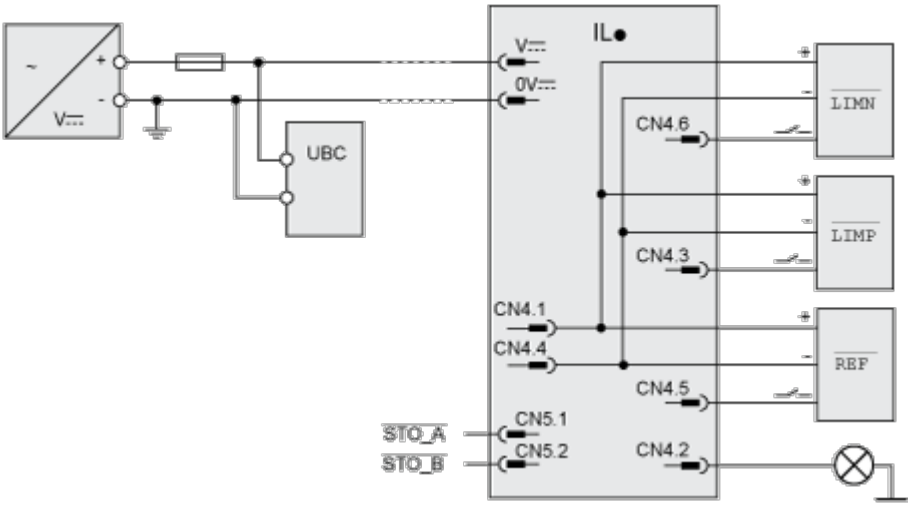

Performance Curves

Torque Characteristics

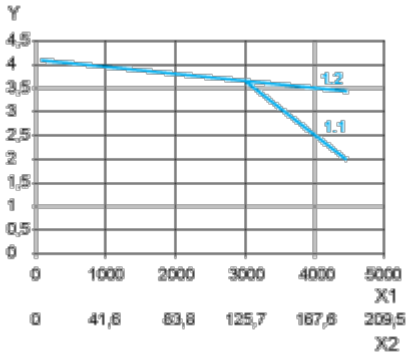

X1 Speed of rotation of motor in rpm

X2 Speed of rotation of gearing in rpm

Y Torque in Nm

1.1 Max. torque at 24 V

1.2 Max. torque at 48 V