# Product data sheet

Specifications

Green Premium™

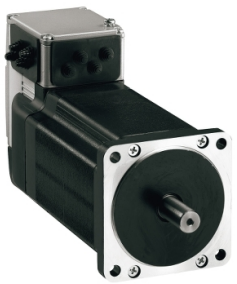

## integrated drive ILS with stepper motor - 24..36 V - RS485 - 5 A

ILS1R852PB1A0

Discontinued on: Oct 9, 2023

Discontinued

**Product availability: Non-Stock - Not normally stocked in distribution facility**

## Main

| | |
|---|---|
| **Range Of Product** | Lexium integrated drive |
| **Product Or Component Type** | Motion integrated drive |
| **Device Short Name** | ILS |
| **Motor Type** | 3-phase stepper motor |
| **Number Of Motor Poles** | 6 |
| **Phase** | Single phase |
| **[Us] Rated Supply Voltage** | 24 V<br>36 V |
| **Network Type** | DC |
| **Communication Interface** | RS485, Integrated |
| **Length** | 6.72 in (170.6 mm) |
| **Winding Type** | Medium speed of rotation and medium torque |
| **Electrical Connection** | Printed circuit board connector |
| **Holding Brake** | Without |
| **Gear Box Type** | Without |
| **Nominal Speed** | 100 rpm 24 V<br>200 rpm 36 V |
| **Nominal Torque** | 35.40 lbf.in (4 N.m) |
| **Holding Torque** | 35.40 lbf.in (4 N.m) |

## Complementary

| | |
|---|---|
| **Transmission Rate** | 9.6, 19.2 and 38.4 kbauds |
| **Mounting Support** | Flange |
| **Motor Flange Size** | 3.35 in (85 mm) |
| **Number Of Motor Stacks** | 2 |
| **Centring Collar Diameter** | 2.36 in (60 mm) |
| **Centring Collar Depth** | 0.08 in (2 mm) |
| **Number Of Mounting Holes** | 4 |
| **Mounting Holes Diameter** | 0.26 in (6.5 mm) |
| **Circle Diameter Of The Mounting Holes** | 3.90 in (99 mm) |
| **Feedback Type** | Index pulse |

Price is “List Price” and may be subject to a trade discount – check with your local distributor or retailer for actual price.

Disclaimer: This documentation is not intended as a substitute for and is not to be used for determining suitability or reliability of these products for specific user applications

| | |
|---|---|
| **Shaft End** | Untapped |
| **Second Shaft** | Without second shaft end |
| **Shaft Diameter** | 0.47 in (12 mm) |
| **Shaft Length** | 1.18 in (30 mm) |
| **Supply Voltage Limits** | 18…40 V |
| **Current Consumption** | 5000 mA maximum |
| **Associated Fuse Rating** | 10 A |
| **Input/Output Type** | 4 signals (each be used as input or output) |
| **Voltage State 0 Guaranteed** | -3...4.5 V |
| **Voltage State 1 Guaranteed** | 15...30 V |
| **Discrete Input Current** | 10 mA at 24 V on/STO_A safety input<br>3 mA at 24 V on/STO_B safety input<br>2 mA at 24 V 24 V signal interface |
| **Discrete Output Voltage** | 23...25 V |
| **Maximum Switching Current** | 100 mA per output<br>200 mA total |
| **Protection Type** | Short circuit of the output voltage<br>Overload of output voltage<br>Safe torque off |
| **Peak Stall Torque** | 35.40 lbf.in (4 N.m) |
| **Continuous Stall Torque** | 35.40 lbf.in (4 N.m) |
| **Speed Feedback Resolution** | 20000 points/turn |
| **Accuracy Error** | +/- 6 arc min |
| **Rotor Inertia** | 2.2 kg.cm² |
| **Maximum Mechanical Speed** | 1500 rpm |
| **Maximum Radial Force Fr** | 100 N |
| **Maximum Axial Force Fa** | 170 N tensile force)<br>30 N force pressure) |
| **Service Life In Hours** | 20000 h bearing |
| **Marking** | CE |
| **Type Of Cooling** | Natural convection |
| **Net Weight** | 7.94 lb(US) (3.6 kg) |

# Environment

| | |
|---|---|
| **Standards** | EN 61800-3 : 2001-02<br>IEC 60072-1<br>EN/IEC 50178<br>EN 50347<br>EN 61800-3:2001, second environment<br>IEC 61800-3, Ed 2<br>EN/IEC 61800-3 |
| **Product Certifications** | cUL<br>UL<br>TÜV |
| **Ambient Air Temperature For Operation** | 122…149 °F (50…65 °C) with power derating of 2 % per °C)<br>32…122 °F (0…50 °C) without derating) |
| **Permissible Ambient Air Temperature Around The Device** | 221 °F (105 °C) power amplifier<br>230 °F (110 °C) motor |

| | |
|---|---|
| **Ambient Air Temperature For Storage** | -13…158 °F (-25…70 °C) |
| **Operating Altitude** | <= 3280.84 ft (1000 m) without derating |
| **Relative Humidity** | 15…85 % without condensation |
| **Vibration Resistance** | 20 m/s² 10…500 Hz) 10 cycles EN/IEC 60068-2-6 |
| **Shock Resistance** | 150 m/s² 1000 shocks EN/IEC 60068-2-29 |
| **Ip Degree Of Protection** | IP41 shaft bushing: conforming to EN/IEC 60034-5<br>IP54 total except shaft bushing: conforming to EN/IEC 60034-5 |

## Ordering and shipping details

| | |
|---|---|
| **Category** | US1PC5618288 |
| **Discount Schedule** | PC56 |
| **Gtin** | 3389119227476 |
| **Returnability** | No |
| **Country Of Origin** | DE |

## Packing Units

| | |
|---|---|
| **Unit Type Of Package 1** | PCE |
| **Number Of Units In Package 1** | 1 |
| **Package 1 Height** | 8.86 in (22.5 cm) |
| **Package 1 Width** | 7.68 in (19.5 cm) |
| **Package 1 Length** | 15.75 in (40 cm) |
| **Package 1 Weight** | 10.29 lb(US) (4.667 kg) |
| **Unit Type Of Package 2** | S06 |
| **Number Of Units In Package 2** | 9 |
| **Package 2 Height** | 28.94 in (73.5 cm) |
| **Package 2 Width** | 23.62 in (60 cm) |
| **Package 2 Length** | 31.50 in (80 cm) |
| **Package 2 Weight** | 121.26 lb(US) (55.003 kg) |

## Contractual warranty

| | |
|---|---|
| **Warranty** | 18 months |

## Sustainability

**Green Premium™ label** is Schneider Electric's commitment to delivering products with best-in-class environmental performance. Green Premium promises compliance with the latest regulations, transparency on environmental impacts, as well as circular and low-$CO_2$ products.

**Guide to assessing product sustainability** is a white paper that clarifies global eco-label standards and how to interpret environmental declarations.

Learn more about Green Premium >

Guide to assess a product's sustainability >

Transparency RoHS/REACh

## Well-being performance

| | |
|---|---|
| Mercury Free | |
| Rohs Exemption Information | Yes |
| Pvc Free | |

## Certifications & Standards

| | |
|---|---|
| **Reach Regulation** | REACh Declaration |
| **Eu Rohs Directive** | Pro-active compliance (Product out of EU RoHS legal scope) |
| **China Rohs Regulation** | China RoHS declaration |
| **Environmental Disclosure** | Product Environmental Profile |
| **Weee** | The product must be disposed on European Union markets following specific waste collection and never end up in rubbish bins. |
| **Circularity Profile** | End of Life Information |
| **California Proposition 65** | WARNING: This product can expose you to chemicals including: Lead and lead compounds, which is known to the State of California to cause cancer and birth defects or other reproductive harm. For more information go to www.P65Warnings.ca.gov |

## Dimensions Drawings

### Integrated Drive without Holding Brake

### Dimensions

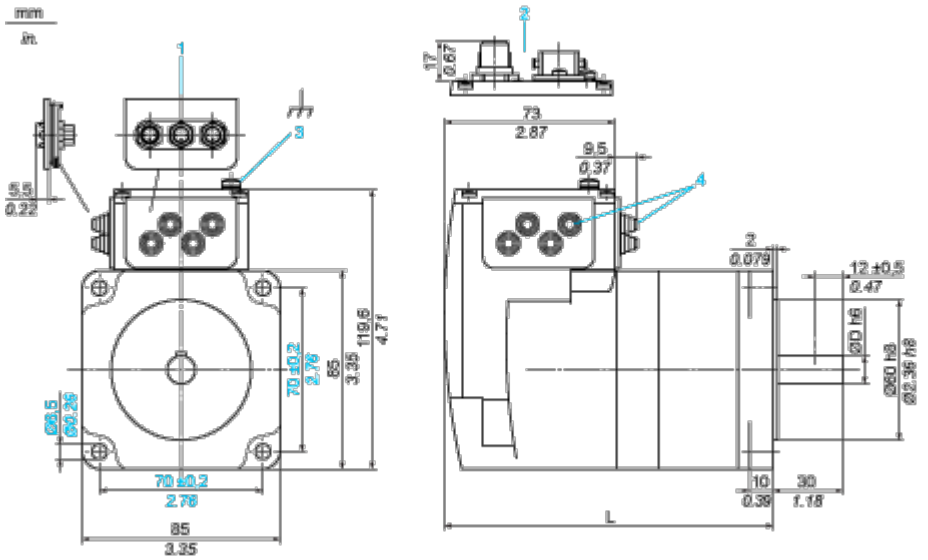


1 Accessories: I/O signal insert with industrial connectors

2 Option: industrial connectors

3 Earth (ground) terminal

4 Accessories: cable entries Ø = 3 ... 9 mm/0.12 ... 0.35 in.

L 170.6 mm/6.72 in.

D 12 mm/0.47 in.

Connections and Schema

**Connection Example with 4 I/O Signals**

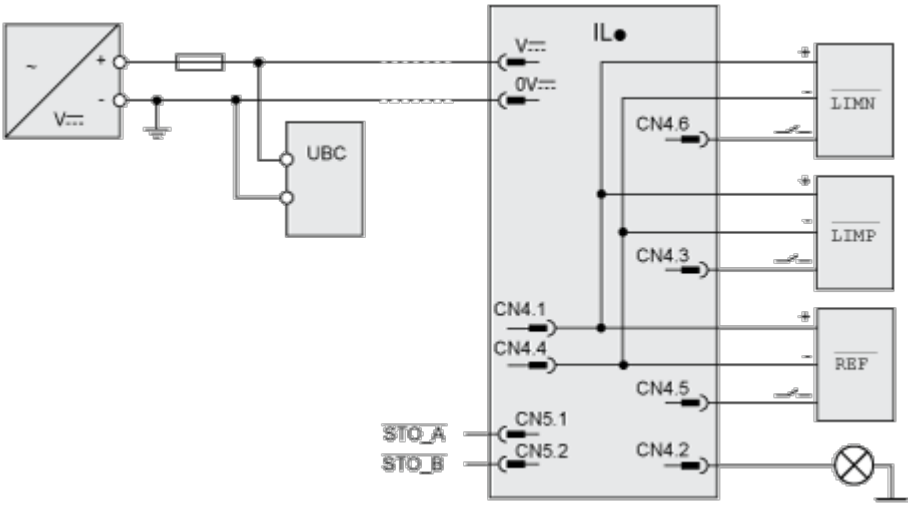

## Performance Curves

### Torque Characteristics

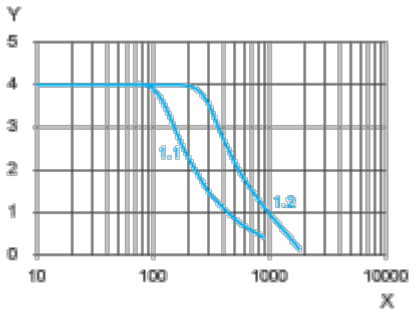


X Speed of rotation in rpm

Y Torque in Nm

1.1 Max. torque at 24 V

1.2 Max. torque at 36 V