Product data sheet

Specifications

Green Premium™

TeSys Deca reversing contactor - 3P(3 NO) - AC-3 - <= 440 V 40 A - 24 V DC coil

LC2D40ABD

Product availability: Non-Stock - Not normally stocked in distribution facility

Price*: 692.00 USD

Main

Range	TeSys TeSys Deca
Product Name	TeSys Deca TeSys Deca
Product Or Component Type	Reversing contactor
Device Short Name	LC2D
Contactor Application	Motor control Resistive load
Utilisation Category	AC-3 AC-1 AC-3e
Device Presentation	Preassembled with reversing power busbar
Poles Description	3P
Power Pole Contact Composition	3 NO
[Ue] Rated Operational Voltage	Power circuit <= 690 V AC 25...400 Hz Power circuit <= 300 V DC
[Ie] Rated Operational Current	40 A (at <140 °F (60 °C)) at <= 440 V AC AC-3 for power circuit 60 A (at <140 °F (60 °C)) at <= 440 V AC AC-1 for power circuit 40 A (at <140 °F (60 °C)) at <= 440 V AC AC-3e for power circuit
Motor Power Kw	11 kW at 220...230 V AC 50-60 Hz 18.5 kW at 380...400 V AC 50-60 Hz 22 kW at 415 V AC 50-60 Hz 22 kW at 440 V AC 50-60 Hz 22 kW at 500 V AC 50-60 Hz 30 kW at 660...690 V AC 50-60 Hz
Motor Power Hp (Ul / Csa)	5 hp at 230/240 V AC 60 Hz for 1 phase motors 10 hp at 230/240 V AC 60 Hz for 3 phase motors 30 hp at 575/600 V AC 60 Hz for 3 phase motors 10 hp at 200/208 V AC 60 Hz for 3 phase motors 3 hp at 115 V AC 60 Hz for 1 phase motors 30 hp at 460/480 V AC 60 Hz for 3 phase motors
Control Circuit Type	DC standard
[Uc] Control Circuit Voltage	24 V DC
Auxiliary Contact Composition	1 NO + 1 NC
[Uimp] Rated Impulse Withstand Voltage	6 kV IEC 60947
Overvoltage Category	III
[Ith] Conventional Free Air Thermal Current	10 A (at 140 °F (60 °C)) for signalling circuit 60 A (at 140 °F (60 °C)) for power circuit

Price is “List Price” and may be subject to a trade discount – check with your local distributor or retailer for actual price.

Disclaimer: This documentation is not intended as a substitute for and is not to be used for determining suitability or reliability of these products for specific user applications

Irms Rated Making Capacity	140 A AC for signalling circuit conforming to IEC 60947-5-1 250 A DC for signalling circuit conforming to IEC 60947-5-1 800 A at 440 V for power circuit conforming to IEC 60947
Rated Breaking Capacity	800 A at 440 V for power circuit conforming to IEC 60947
[Icw] Rated Short-Time Withstand Current	72 A 104 °F (40 °C) - 10 min for power circuit 165 A 104 °F (40 °C) - 1 min for power circuit 320 A 104 °F (40 °C) - 10 s for power circuit 720 A 104 °F (40 °C) - 1 s for power circuit 100 A - 1 s for signalling circuit 120 A - 500 ms for signalling circuit 140 A - 100 ms for signalling circuit
Associated Fuse Rating	10 A gG for signalling circuit conforming to IEC 60947-5-1 80 A gG at <= 690 V coordination type 1 for power circuit 80 A gG at <= 690 V coordination type 2 for power circuit
Average Impedance	1.5 mOhm - Ith 60 A 50 Hz for power circuit
[Ui] Rated Insulation Voltage	Power circuit 690 V IEC 60947-4-1 Power circuit 600 V CSA Power circuit 600 V UL Signalling circuit 690 V IEC 60947-1 Signalling circuit 600 V CSA Signalling circuit 600 V UL
Electrical Durability	1.5 Mcycles 40 A AC-3 <= 440 V 0.7 Mcycles 60 A AC-1 <= 440 V 1.5 Mcycles 40 A AC-3e <= 440 V
Power Dissipation Per Pole	2.4 W AC-3 5.4 W AC-1 2.4 W AC-3e
Front Cover	With
Interlocking Type	Mechanical
Mounting Support	Plate Rail
Standards	CSA C22.2 No 14 EN 60947-4-1 EN 60947-5-1 IEC 60947-4-1 IEC 60947-5-1 UL 508 IEC 60335-1
Product Certifications	UL CSA RINA GOST CCC DNV LROS (Lloyds register of shipping) GL BV UKCA

Connections - Terminals	Control circuit screw clamp terminals 1 0.00…0.01 in² (1…4 mm²)flexible without cable end Control circuit screw clamp terminals 2 0.00…0.01 in² (1…4 mm²)flexible without cable end Control circuit screw clamp terminals 1 0.00…0.01 in² (1…4 mm²)flexible with cable end Control circuit screw clamp terminals 2 0.00…0.00 in² (1…2.5 mm²)flexible with cable end Control circuit screw clamp terminals 1 0.00…0.01 in² (1…4 mm²)solid Control circuit screw clamp terminals 2 0.00…0.01 in² (1…4 mm²)solid Power circuit EverLink BTR screw connectors 1 0.00…0.05 in² (1…35 mm²)flexible without cable end Power circuit EverLink BTR screw connectors 2 0.00…0.04 in² (1…25 mm²)flexible without cable end Power circuit EverLink BTR screw connectors 1 0.00…0.05 in² (1…35 mm²)flexible with cable end Power circuit EverLink BTR screw connectors 2 0.00…0.04 in² (1…25 mm²)flexible with cable end Power circuit EverLink BTR screw connectors 1 0.00…0.05 in² (1…35 mm²)solid Power circuit EverLink BTR screw connectors 2 0.00…0.04 in² (1…25 mm²)solid
Tightening Torque	Control circuit 15.05 lbf.in (1.7 N.m) screw clamp terminals flat Ø 6 mm Control circuit 15.05 lbf.in (1.7 N.m) screw clamp terminals Philips No 2 Power circuit 70.81 lbf.in (8 N.m) EverLink BTR screw connectors 0.04…0.05 in² (25…35 mm²) hexagonal 0.16 in (4 mm) Power circuit 44.25 lbf.in (5 N.m) EverLink BTR screw connectors 0.00…0.04 in² (1…25 mm²) hexagonal 0.16 in (4 mm) Control circuit 15.05 lbf.in (1.7 N.m) screw clamp terminals pozidriv No 2 Power circuit 22.13 lbf.in (2.5 N.m) screw clamp terminals pozidriv No 2
Operating Time	16...24 ms opening 42.5...57.5 ms closing
Safety Reliability Level	B10d = 1369863 cycles contactor with nominal load EN/ISO 13849-1 B10d = 20000000 cycles contactor with mechanical load EN/ISO 13849-1
Mechanical Durability	10 Mcycles
Maximum Operating Rate	3600 cyc/h 140 °F (60 °C)

Complementary

Coil Technology	Built-in bidirectional peak limiting diode suppressor
Control Circuit Voltage Limits	0.1...0.3 Uc -40…158 °F (-40…70 °C) drop-out DC 0.75...1.25 Uc -40…140 °F (-40…60 °C) operational DC 1...1.25 Uc 140…158 °F (60…70 °C) operational DC
Time Constant	34 ms
Inrush Power In W	19 W 68 °F (20 °C))
Hold-In Power Consumption In W	7.4 W 68 °F (20 °C)
Auxiliary Contacts Type	Mechanically linked 1 NO + 1 NC IEC 60947-5-1 Mirror contact 1 NC IEC 60947-4-1
Signalling Circuit Frequency	25...400 Hz
Minimum Switching Current	5 mA for signalling circuit
Minimum Switching Voltage	17 V for signalling circuit
Non-Overlap Time	1.5 ms on de-energisation between NC and NO contact 1.5 ms on energisation between NC and NO contact
Insulation Resistance	> 10 MOhm for signalling circuit

Environment

Ip Degree Of Protection	IP20 front face IEC 60529
Climatic Withstand	IACS E10 IEC 60947-1 Annex Q category D
Protective Treatment	TH IEC 60068-2-30

Pollution Degree	3
Ambient Air Temperature For Operation	-40…140 °F (-40…60 °C) 140…158 °F (60…70 °C) with derating
Ambient Air Temperature For Storage	-76…176 °F (-60…80 °C)
Operating Altitude	0...9842.52 ft (0...3000 m)
Fire Resistance	1562 °F (850 °C) IEC 60695-2-1
Flame Retardance	V1 conforming to UL 94
Mechanical Robustness	Vibrations contactor open2 Gn, 5...300 Hz Vibrations contactor closed4 Gn, 5...300 Hz Shocks contactor open10 Gn for 11 ms Shocks contactor closed15 Gn for 11 ms
Height	4.80 in (122 mm)
Width	4.69 in (119 mm)
Depth	4.72 in (120 mm)
Net Weight	4.45 lb(US) (2.02 kg)

Ordering and shipping details

Category	US10I1222358
Discount Schedule	0I12
Gtin	3389118340923
Returnability	No
Country Of Origin	FR

Packing Units

Unit Type Of Package 1	PCE
Number Of Units In Package 1	1
Package 1 Height	5.51 in (14.0 cm)
Package 1 Width	6.38 in (16.2 cm)
Package 1 Length	7.80 in (19.8 cm)
Package 1 Weight	4.78 lb(US) (2.168 kg)

Contractual warranty

Warranty	18 months

Sustainability

Green Premium™ label is Schneider Electric's commitment to delivering products with best-in-class environmental performance. Green Premium promises compliance with the latest regulations, transparency on environmental impacts, as well as circular and low-CO_2 products.

Guide to assessing product sustainability is a white paper that clarifies global eco-label standards and how to interpret environmental declarations.

Learn more about Green Premium >

Guide to assess a product's sustainability >

Transparency RoHS/REACh

Well-being performance

Reach Free Of Svhc	
Mercury Free	
Rohs Exemption Information	Yes
Pvc Free	

Certifications & Standards

Reach Regulation	REACh Declaration
Eu Rohs Directive	Compliant EU RoHS Declaration
China Rohs Regulation	China RoHS declaration Pro-active China RoHS declaration (out of China RoHS legal scope)
Environmental Disclosure	Product Environmental Profile
Weee	The product must be disposed on European Union markets following specific waste collection and never end up in rubbish bins.
Circularity Profile	End of Life Information
California Proposition 65	WARNING: This product can expose you to chemicals including: Antimony oxide & Antimony trioxide, which is known to the State of California to cause cancer. For more information go to www.P65Warnings.ca.gov

Dimensions Drawings

Dimensions

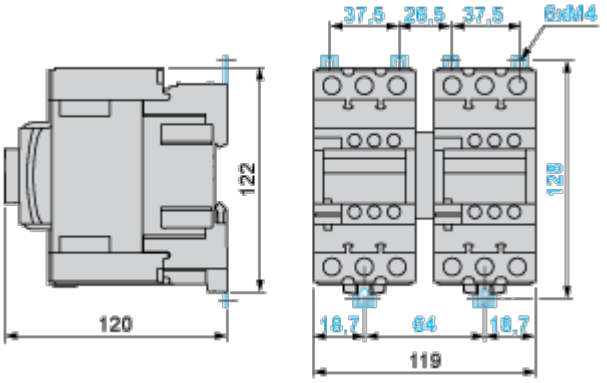

Connections and Schema
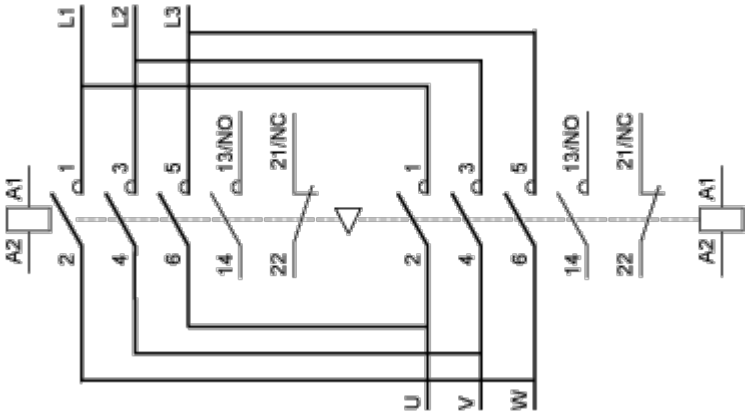
Wiring