Product data sheet

Specifications

motion servo drive, Lexium 32, 3A, three phase, supply voltage 208 to 480V, 0.9kW

LXM32SD12N4

Product availability: Stock - Normally stocked in distribution facility

Price*: 1,568.08 USD

Main

Range Of Product	Lexium 32
Product Or Component Type	Motion servo drive
Device Short Name	LXM32S
Format Of The Drive	Book
Phase	Three phase
[Us] Rated Supply Voltage	200...240 V - 15...10 % 380...480 V - 15...10 %
Supply Voltage Limits	170…264 V 323…528 V
Supply Frequency	50/60 Hz - 5...5 %
Network Frequency	47.5...63 Hz
Emc Filter	Integrated
Continuous Output Current	3 A 8 kHz
Output Current 3S Peak	12 A 208 V 5 s 12 A 480 V 5 s
Maximum Continuous Power	800 W 208 V 1600 W 400 V 1600 W 480 V
Nominal Power	0.7 kW 208 V 8 kHz 0.9 kW 400 V 8 kHz 0.9 kW 480 V 8 kHz
Line Current	3.1 A 79 % 208 V, with external line choke 2 mH 3.4 A 90 % 400 V, with external line choke 2 mH 2.9 A 98 % 480 V, with external line choke 2 mH 3.6 A 136 % 208 V, without line choke 2.9 A 177 % 400 V, without line choke 2.4 A 182 % 480 V, without line choke

Complementary

Switching Frequency	8 kHz
Overvoltage Category	III
Maximum Leakage Current	30 mA
Output Voltage	<= power supply voltage
Electrical Isolation	Between power and control
Type Of Cable	Single-strand IEC cable 122 °F (50 °C)) copper 90 °C XLPE/EPR
Electrical Connection	Terminal 3 mm², AWG 12 CN8)

Price is “List Price” and may be subject to a trade discount – check with your local distributor or retailer for actual price.

Disclaimer: This documentation is not intended as a substitute for and is not to be used for determining suitability or reliability of these products for specific user applications

Tightening Torque	CN8 4.43 lbf.in (0.5 N.m)
Discrete Input Number	2 capture
Discrete Input Type	Capture CAP
Sampling Duration	0.25 ms
Discrete Input Voltage	24 V DC capture
Discrete Input Logic	Positive compliment of STO_A, compliment of STO_B)< 5 V > 15 V EN/IEC 61131-2 type 1
Response Time	<= 5 ms compliment of STO_A, compliment of STO_B
Discrete Output Number	3
Discrete Output Type	Logic DO)24 V DC
Discrete Output Voltage	<= 30 V DC
Discrete Output Logic	Positive or negative DO)EN/IEC 61131-2
Contact Bounce Time	<= 1 ms compliment of STO_A, compliment of STO_B
Braking Current	50 mA
Response Time On Output	250 µs DO)discrete
Safety Function	STO (safe torque off), Integrated
Safety Level	SIL 3 EN/IEC 61508
Communication Interface	Modbus, Integrated SERCOS III, Integrated
Connector Type	RJ45 (labelled CN7) Modbus
Commissioning Port	2-wire RS485 multidrop Modbus
Transmission Rate	9600, 19200, 38400 bps 131.23 ft (40 m) Modbus
Number Of Addresses	1…247 Modbus
Status Led	1 LED (Red) servo drive voltage
Signalling Function	Display of faults 7 segments
Marking	CE
Operating Position	Vertical +/- 10 degree
Product Compatibility	Servo motor BMH 2.76 in (70 mm), 1
Width	2.68 in (68 mm)
Height	10.63 in (270 mm)
Depth	9.33 in (237 mm)
Net Weight	4.19 lb(US) (1.9 kg)

Environment

Electromagnetic Compatibility	Conducted EMC EN 55011 class A group 1
Standards	EN/IEC 61800-3
Product Certifications	CSA
Ip Degree Of Protection	IP20 conforming to EN/IEC 60529
Vibration Resistance	1 gn 13…150 Hz)EN/IEC 60068-2-6
Shock Resistance	15 gn 11 ms EN/IEC 60028-2-27
Pollution Degree	2 EN/IEC 61800-5-1
Environmental Characteristic	Classes 3C1 IEC 60721-3-3

Relative Humidity	Class 3K3 (5 to 85 %) without condensation IEC 60721-3-3
Ambient Air Temperature For Operation	32…122 °F (0…50 °C) UL
Ambient Air Temperature For Storage	-13…158 °F (-25…70 °C)
Type Of Cooling	Integrated fan
Operating Altitude	<= 3280.84 ft (1000 m) without derating

Ordering and shipping details

Category	US1PC5118261
Discount Schedule	PC51
Gtin	3606480694745
Returnability	Yes
Country Of Origin	ID

Packing Units

Unit Type Of Package 1	PCE
Number Of Units In Package 1	1
Package 1 Height	10.83 in (27.5 cm)
Package 1 Width	12.99 in (33 cm)
Package 1 Length	4.17 in (10.6 cm)
Package 1 Weight	5.48 lb(US) (2.486 kg)
Unit Type Of Package 2	S03
Number Of Units In Package 2	2
Package 2 Height	11.81 in (30 cm)
Package 2 Width	11.81 in (30 cm)
Package 2 Length	15.75 in (40 cm)
Package 2 Weight	12.53 lb(US) (5.685 kg)
Unit Type Of Package 3	PAL
Number Of Units In Package 3	16
Package 3 Height	30.31 in (77 cm)
Package 3 Width	23.62 in (60 cm)
Package 3 Length	31.50 in (80 cm)
Package 3 Weight	106.43 lb(US) (48.276 kg)

Contractual warranty

Warranty	18 months

Sustainability

Green Premium™ label is Schneider Electric's commitment to delivering products with best-in-class environmental performance. Green Premium promises compliance with the latest regulations, transparency on environmental impacts, as well as circular and low-CO_2 products.

Guide to assessing product sustainability is a white paper that clarifies global eco-label standards and how to interpret environmental declarations.

Learn more about Green Premium >

Guide to assess a product's sustainability >

Transparency RoHS/REACh

Well-being performance

Mercury Free	
Rohs Exemption Information	Yes
Pvc Free	

Certifications & Standards

Reach Regulation	REACh Declaration
Eu Rohs Directive	Pro-active compliance (Product out of EU RoHS legal scope)
China Rohs Regulation	China RoHS declaration
Environmental Disclosure	Product Environmental Profile
Weee	The product must be disposed on European Union markets following specific waste collection and never end up in rubbish bins.
Circularity Profile	End of Life Information
California Proposition 65	WARNING: This product can expose you to chemicals including: Lead and lead compounds, which is known to the State of California to cause cancer and birth defects or other reproductive harm. For more information go to www.P65Warnings.ca.gov

Dimensions Drawings

Lexium 32 Servo Drive

Dimensions

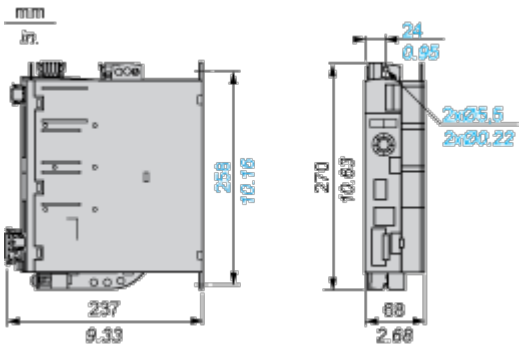

Mounting and Clearance

Lexium 32 Motion Control Servo Drives

Mounting Recommendations

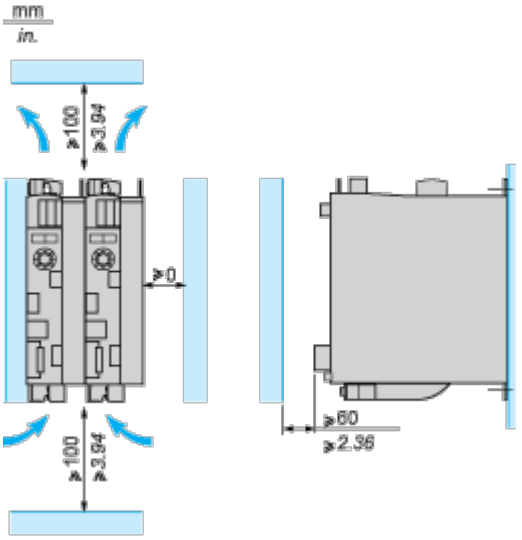

LXM32•U45M2, •U90M2 and LXM32•U60N4 servo drives are cooled by natural convection. LXM32•D18M2, •D30M2, LXM32 •D12N4, •D18N4, •D30N4 and •D72N4servo drives have an integrated fan.
When installing the servo drive in the enclosure, follow the instructions below with regard to the temperature and protection index:

- Provide sufficient cooling of the servo drive
- Do not mount the servo drive near heat sources
- Do not mount the servo drive on flammable materials
- Do not heat the servo drive cooling air by currents of hot air from other equipment and components, for example from an external braking resistor
- Mount the servo drive vertically (± 10%)
- If the servo drive is used above its thermal limits, control stops due to overtemperature

NOTE: For cables that are connected via the underside of the servo drive, a free space ≥ 200 mm/7.87 in. is required under the unit to comply with the bending radius of the connection cables.

Ambient temperature	Mounting distances	Instructions to be followed
0°C…+ 50°C	d ≥ 0 mm	–
+ 50°C…+ 60°C	d ≥ 0 mm	Reduce the output current by 2.2% per °C above 50°C

NOTE: Do not use insulated enclosures, as they have a poor level of conductivity.

Recommendations for Mounting in an Enclosure

To ensure good air circulation in the servo drive:

- Fit ventilation grilles on the enclosure.
- Ensure that ventilation is adequate, otherwise install a forced ventilation unit with a filter.

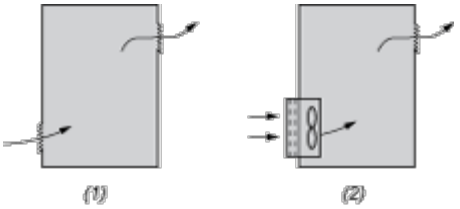

(1) Natural convection

(2) Forced ventilation

- Any apertures and/or fans must provide a flow rate at least equal to that of the servo drive fans (refer to characteristics).
- Use special filters with IP 54 protection.

Mounting in Metal Enclosure (IP 54 Degree of Protection)

The servo drive must be mounted in a dust and damp proof enclosure in certain environmental conditions, such as dust, corrosive gases, high humidity with risk of condensation and dripping water, splashing liquid, etc. In these cases, Lexium 32 servo drives can be installed in an enclosure where the internal temperature must not exceed 60°C.