Product data sheet

Specifications

Panelboard interior, NQ, main lugs, 400A, Al bus, 42 pole spaces, 3 phase, 4 wire, 240VAC, 48VDC

NQ442L4

Product availability: Stock - Normally stocked in distribution facility

Price*: 2,012.00 USD

Main

Panelboard Type	Main lugs
Branch Circuit Breaker Type	QOB QOB-VH QHB
Busbar Material	Aluminium

Complementary

Number Of Spaces	42
Enclosure Nominal Height	50 in (1270.00 mm)
Enclosure Nominal Width	20 in (508.00 mm)
Enclosure Nominal Depth	5.75 in (146.05 mm) NEMA 1 6.5 in (165.10 mm) NEMA 3R/5/12
Line Rated Current	400 A
[Iu] Rated Interrupted Current	10 kA 22 kA 65 kA
Wiring Configuration	4-wire
Number Of Phases	3 phase
Voltage Rating	240 V AC 48 V DC
Connections - Terminals	Lug line AWG 1/0...750 kcmil aluminium Lug neutral AWG 1/0...750 kcmil aluminium
Tightening Torque	274.99…300.04 lbf.in (31.07…33.90 N.m) 0.08…0.59 in² (53.48…380 mm²) (AWG 1/0...750 kcmil) 274.99…300.04 lbf.in (31.07…33.90 N.m) 0.08…0.27 in² (53.48…177.3 mm²) (AWG 1/0...350 kcmil) 549.98 lbf.in (62.14 N.m) 0.08…0.59 in² (53.48…380 mm²) (AWG 1/0...750 kcmil) 549.98 lbf.in (62.14 N.m) 0.08…0.24 in² (53.48…152 mm²) (AWG 1/0...300 kcmil) 375.01 lbf.in (42.37 N.m) 0.08…0.59 in² (53.48…380 mm²) (AWG 1/0...750 kcmil) 375.01 lbf.in (42.37 N.m) 0.08…0.24 in² (53.48…152 mm²) (AWG 1/0...300 kcmil)
Height	45 in (1143.00 mm)
Width	10.44 in (265.18 mm)

Environment

Standards	CSA UL

Price is “List Price” and may be subject to a trade discount – check with your local distributor or retailer for actual price.

Disclaimer: This documentation is not intended as a substitute for and is not to be used for determining suitability or reliability of these products for specific user applications

Ordering and shipping details

Category	US1PE1A09151
Discount Schedule	PE1A
Gtin	785901507895
Returnability	Yes
Country Of Origin	MX

Packing Units

Unit Type Of Package 1	PCE
Number Of Units In Package 1	1
Package 1 Height	6.18 in (15.7 cm)
Package 1 Width	14.09 in (35.8 cm)
Package 1 Length	50.00 in (127.0 cm)
Package 1 Weight	22.80 lb(US) (10.34 kg)
Unit Type Of Package 2	PAL
Number Of Units In Package 2	15
Package 2 Height	40.00 in (101.6 cm)
Package 2 Width	42.00 in (106.68 cm)
Package 2 Length	60.00 in (152.4 cm)
Package 2 Weight	465.42 lb(US) (211.11 kg)

Contractual warranty

Warranty	18 months

Sustainability

Green Premium™ label is Schneider Electric's commitment to delivering products with best-in-class environmental performance. Green Premium promises compliance with the latest regulations, transparency on environmental impacts, as well as circular and low-CO_2 products.

Guide to assessing product sustainability is a white paper that clarifies global eco-label standards and how to interpret environmental declarations.

Learn more about Green Premium >

Guide to assess a product's sustainability >

Transparency RoHS/REACh

Well-being performance

- Reach Free Of Svhc
- Toxic Heavy Metal Free
- Mercury Free
- Rohs Exemption Information — Yes

Certifications & Standards

Reach Regulation	REACh Declaration
Eu Rohs Directive	Compliant EU RoHS Declaration
China Rohs Regulation	China RoHS declaration Pro-active China RoHS declaration (out of China RoHS legal scope)
Environmental Disclosure	Product Environmental Profile
Circularity Profile	No need of specific recycling operations
California Proposition 65	WARNING: This product can expose you to chemicals including: Nickel compounds, which is known to the State of California to cause cancer, and Bisphenol A (BPA), which is known to the State of California to cause birth defects or other reproductive harm. For more information go to www.P65Warnings.ca.gov

Dimensions Drawings

Approximate Dimensions

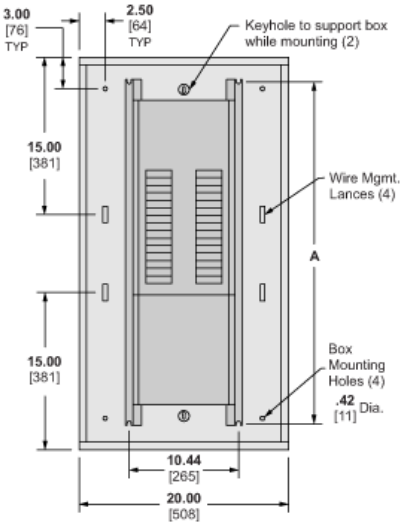

Typical Box with Interior

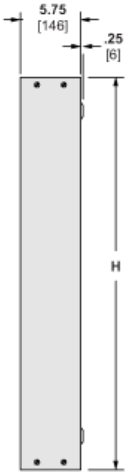

Typical Box Side View

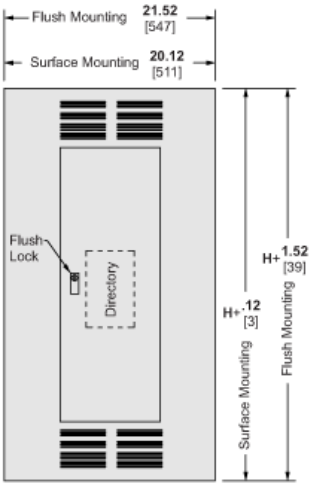

Typical Front

in.
[mm]

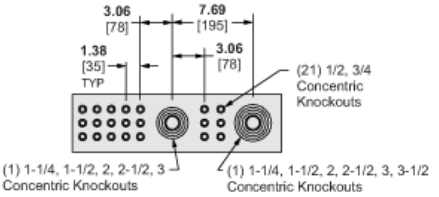

Endwall with Knockouts
(Other Endwall is Blank)

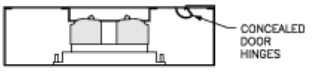

Typical Mounting of QO/QOB Circuit Breakers

MAXIMUM MAIN LUGS AMPERE RATING	MAXIMUM NUMBER OF CIRCUITS	H		A	
		IN	MM	IN	MM
400A	30 & 42	50.00	1270	45.00	1143
	54	56.00	1422	51.00	1295
	72	62.00	1575	57.00	1448
	84	68.00	1727	63.00	1600
400A WITH SUB FEED LUGS	30 & 42	50.00	1270	45.00	1143
	54	56.00	1422	51.00	1295
	72	62.00	1575	57.00	1448
	84	68.00	1727	63.00	1600
400A WITH FEED THRU LUGS	30 & 42	56.00	1422	51.00	1295
	54	62.00	1575	57.00	1448
	72	68.00	1727	63.00	1600
	84	74.00	1880	69.00	1753
400A WITH SUB FEED BREAKERS	30 & 42	74.00	1880	69.00	1753
	54	80.00	2032	75.00	1905
	72	86.00	2184	81.00	2057
600A *	30 & 42	50.00	1270	45.00	1143
	54	56.00	1422	51.00	1295
	72	62.00	1575	57.00	1448
	84	68.00	1727	63.00	1600
600A WITH FEED THRU LUGS	30 & 42	62.00	1575	57.00	1448
	54	68.00	1727	63.00	1600
	72	74.00	1880	69.00	1753
	84	80.00	2032	75.00	1905
600A WITH SUB FEED BREAKERS	30 & 42	74.00	1880	69.00	1753
	54	80.00	2032	75.00	1905
	72	86.00	2184	81.00	2057

* For Type 3R enclosure, increase height dimension by 12.00 / [305]