Product data sheet

Specifications

single function relay, Harmony Timer Relays, 0.7A, 1CO, 0,1s.. 100h, on delay, solid state output, 24..240V AC DC

RE17LAMW

Product availability: Stock - Normally stocked in distribution facility

Price*: 45.40 USD

Main

Range Of Product	Harmony Timer Relays
Product Or Component Type	Single function relay
Discrete Output Type	Solid state
Width	0.69 in (17.5 mm)
Component Name	RE17L
Time Delay Type	Power on-delay
Time Delay Range	1...10 s 10...100 h 6...60 s 0.1...1 s 1...10 min 6...60 min 1...10 h
Nominal Output Current	0.7 A

Complementary

Control Type	Selector switch front panel
[Us] Rated Supply Voltage	24...240 V AC/DC 50/60 Hz
Voltage Range	0.85...1.1 Us
Supply Frequency	50...60 Hz +/- 5 %
Control Signal Pulse Width	0.05 s typical
Insulation Resistance	100 MOhm 500 V DC IEC 60664-1
[Uimp] Rated Impulse Withstand Voltage	5 kV 1.2/50 µs
Power On Delay	100 ms
Connections - Terminals	Screw terminals, 1 x 0.5...1 x 3.3 mm² AWG 20...AWG 12) solid without cable end Screw terminals, 2 x 0.5...2 x 2.5 mm² AWG 20...AWG 14) solid without cable end Screw terminals, 1 x 0.2...1 x 2.5 mm² AWG 24...AWG 14) flexible with cable end Screw terminals, 2 x 0.2...2 x 1.5 mm² AWG 24...AWG 16) flexible with cable end
Tightening Torque	5.31…8.85 lbf.in (0.6…1 N.m) IEC 60947-1
Dielectric Strength	2.5 kV 1 mA/1 minute 50 Hz IEC 61812-1
Housing Material	Self-extinguishing
Repeat Accuracy	+/- 0.5 % IEC 61812-1
Temperature Drift	+/- 0.05 %/°C

Price is “List Price” and may be subject to a trade discount – check with your local distributor or retailer for actual price.

Disclaimer: This documentation is not intended as a substitute for and is not to be used for determining suitability or reliability of these products for specific user applications

Voltage Drift	+/- 0.2 %/V
Setting Accuracy Of Time Delay	+/- 10 % of full scale 25 °C IEC 61812-1
Reset Time	350 ms on de-energisation typical
On-Load Factor	100 %
Power Consumption In Va	0…3 VA 240 V AC
Maximum Power Consumption In W	1.5 W 240 V DC
Breaking Capacity	0.5 A AC/DC UL 0.7 A AC/DC 68 °F (20 °C)
Operating Frequency	10 Hz
Maximum Output Current	20 A
Minimum Switching Current	10 mA
Maximum Leakage Current	5 mA
Maximum Switching Voltage	250 V AC/DC
Maximum Voltage Drop	<4 V 3-wire <8 V 2-wire
Electrical Durability	100000000 cycles
Marking	CE
Creepage Distance	4 kV/3 IEC 60664-1
Safety Reliability Data	MTTFd = 353.8 years B10d = 320000
Mounting Position	Any position in relation to normal vertical mounting plane
Mounting Support	35 mm DIN rail conforming to IEC 60715
Net Weight	0.15 lb(US) (0.068 kg)
Time Delay Type	A
Functionality	On-delay timing
Number Of Functions	1
Compatibility Code	RE17

Environment

Immunity To Microbreaks	20 ms
Derating Factor	5 mA/°C
Standards	2004/108/EC IEC 61000-6-1 2006/95/EC IEC 61000-6-3 IEC 61000-6-2 IEC 61812-1 IEC 61000-6-4
Product Certifications	GL CSA cULus
Ambient Air Temperature For Storage	-22…140 °F (-30…60 °C)
Ambient Air Temperature For Operation	-4…140 °F (-20…60 °C)
Ip Degree Of Protection	IP20 IEC 60529 terminal block) IP40 IEC 60529 housing) IP50 IEC 60529 front panel)
Vibration Resistance	20 m/s² 10…150 Hz)IEC 60068-2-6

Shock Resistance	15 gn 11 ms IEC 60068-2-27
Relative Humidity	93 % without condensation IEC 60068-2-30
Electromagnetic Compatibility	Electrostatic discharge immunity test 6 kV in contact) level 3 IEC 61000-4-2 Electrostatic discharge immunity test 8 kV in air) level 3 IEC 61000-4-2 Susceptibility to electromagnetic fields 10 V/m 80 MHz to 1 GHz) level 3 IEC 61000-4-3 Electrical fast transient/burst immunity test 1 kV capacitive connecting clip) level 3 IEC 61000-4-4 Electrical fast transient/burst immunity test 2 kV direct) level 3 IEC 61000-4-4 1.2/50 µs shock waves immunity test 1 kV differential mode) level 3 IEC 61000-4-5 1.2/50 µs shock waves immunity test 2 kV common mode) level 3 IEC 61000-4-5 Conducted RF disturbances 10 V 0.15...80 MHz) level 3 IEC 61000-4-6 Voltage dips and interruptions immunity test 0 % 1 cycle) IEC 61000-4-11 Voltage dips and interruptions immunity test 70 % 25/30 cycles) IEC 61000-4-11 Conducted and radiated emissionsclass B EN 55022

Ordering and shipping details

Category	US10CP222370
Discount Schedule	0CP2
Gtin	3606480552625
Returnability	Yes
Country Of Origin	ID

Packing Units

Unit Type Of Package 1	PCE
Number Of Units In Package 1	1
Package 1 Height	1.02 in (2.600 cm)
Package 1 Width	3.07 in (7.800 cm)
Package 1 Length	3.74 in (9.500 cm)
Package 1 Weight	2.47 oz (70.000 g)
Unit Type Of Package 2	S02
Number Of Units In Package 2	40
Package 2 Height	5.91 in (15.000 cm)
Package 2 Width	11.81 in (30.000 cm)
Package 2 Length	15.75 in (40.000 cm)
Package 2 Weight	7.21 lb(US) (3.270 kg)

Sustainability

Green Premium™ label is Schneider Electric's commitment to delivering products with best-in-class environmental performance. Green Premium promises compliance with the latest regulations, transparency on environmental impacts, as well as circular and low-CO_2 products.

Guide to assessing product sustainability is a white paper that clarifies global eco-label standards and how to interpret environmental declarations.

Learn more about Green Premium >

Guide to assess a product's sustainability >

Transparency RoHS/REACh

Well-being performance

Mercury Free

Rohs Exemption Information Yes

Certifications & Standards

Reach Regulation	REACh Declaration
Eu Rohs Directive	Pro-active compliance (Product out of EU RoHS legal scope)
China Rohs Regulation	China RoHS declaration
Environmental Disclosure	Product Environmental Profile
Circularity Profile	End of Life Information
California Proposition 65	WARNING: This product can expose you to chemicals including: Lead and lead compounds, which is known to the State of California to cause cancer and birth defects or other reproductive harm. For more information go to www.P65Warnings.ca.gov

Dimensions Drawings

Width 17.5 mm

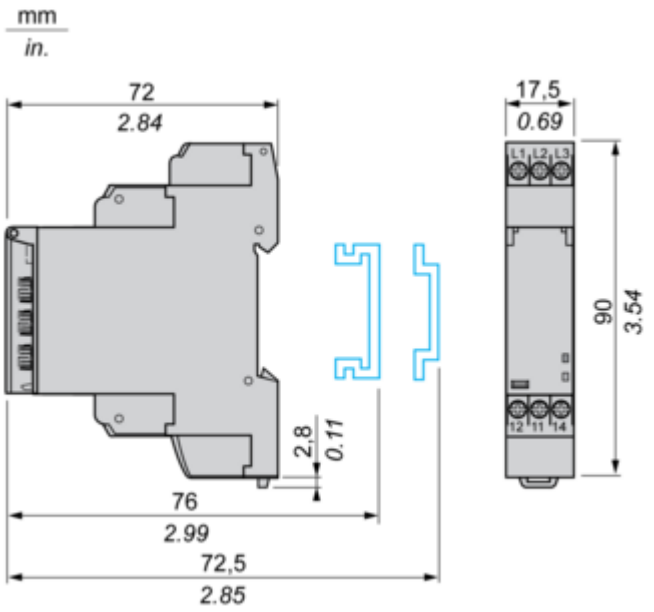

Connections and Schema

Internal Wiring Diagram

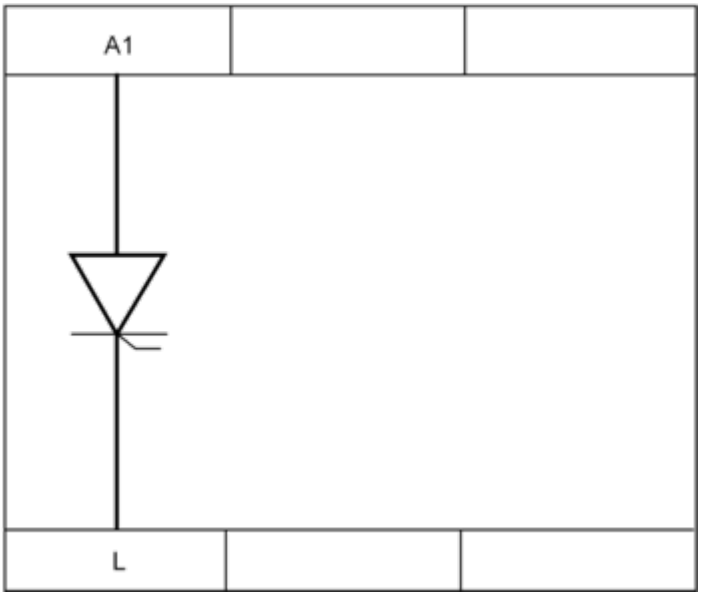

Wiring Diagram

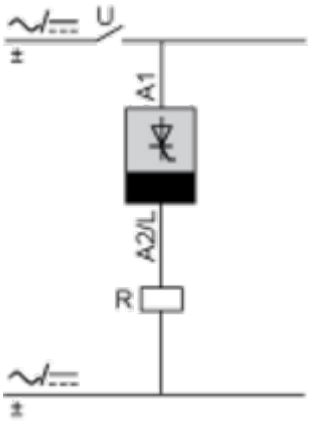

Technical Description

Function A : Power on Delay Relay

Description

The timing period T begins on energisation. After timing, the output(s) R close(s). The second output can be either timed or instantaneous.

Function: 1 Output

Function: 2 Outputs

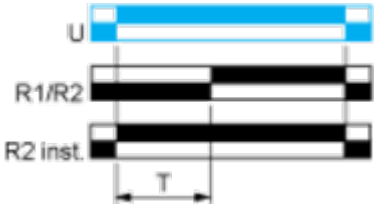

2 timed outputs (R1/R2) or 1 timed output (R1) and 1 instantaneous output (R2 inst.)

Legend

Relay de-energised
Relay energised
Output open
Output closed

C	Control contact
G	Gate
R	Relay or solid state output
R1/R2	2 timed outputs
R2 inst.	The second output is instantaneous if the right position is selected
T	Timing period
Ta -	Adjustable On-delay
Tr -	Adjustable Off-delay
U	Supply