Product data sheet

Specifications

single function relay, Harmony Timer Relays, 5A, 1 CO, 0.05sâ€¦10min, delay on de energization, 24...240V AC DC

RE22R1KMR

Product availability: Stock - Normally stocked in distribution facility

Price*: 86.18 USD

Main

Range Of Product	Harmony Timer Relays
Product Or Component Type	Single function relay
Discrete Output Type	Relay
Device Short Name	RE22
Nominal Output Current	5 A

Complementary

Contacts Type And Composition	1 C/O timed contact, cadmium free
Time Delay Type	Delay on de-energization
Time Delay Range	10...100 s 1...10 min 1...10 s 0.3...3 s 3...30 s 0.05...1 s 30...300 s
Control Type	Rotary knob
[Us] Rated Supply Voltage	24...240 V AC/DC 50/60 Hz
Release Input Voltage	<= 2.4 V
Voltage Range	0.85...1.1 Us
Supply Frequency	50...60 Hz +/- 5 %
Connections - Terminals	Screw terminals, 1 x 0.5...1 x 3.3 mm² AWG 20...AWG 12) solid without cable end Screw terminals, 2 x 0.5...2 x 2.5 mm² AWG 20...AWG 14) solid without cable end Screw terminals, 1 x 0.2...1 x 2.5 mm² AWG 24...AWG 14) flexible with cable end Screw terminals, 2 x 0.2...2 x 1.5 mm² AWG 24...AWG 16) flexible with cable end
Tightening Torque	5.31…8.85 lbf.in (0.6…1 N.m) IEC 60947-1
Housing Material	Self-extinguishing
Repeat Accuracy	+/- 0.5 % IEC 61812-1
Temperature Drift	+/- 0.05 %/°C
Voltage Drift	+/- 0.2 %/V
Setting Accuracy Of Time Delay	+/- 10 % of full scale 25 °C IEC 61812-1
Insulation Resistance	100 MOhm 500 V DC IEC 60664-1
Recovery Time	100 ms on de-energisation

Price is “List Price” and may be subject to a trade discount – check with your local distributor or retailer for actual price.

Disclaimer: This documentation is not intended as a substitute for and is not to be used for determining suitability or reliability of these products for specific user applications

Immunity To Microbreaks	10 ms
Power Consumption In Va	3 VA 240 V AC
Power Consumption In W	2 W 240 V DC
Switching Capacity In Va	1250 VA
Minimum Switching Current	10 mA 5 V DC
Maximum Switching Current	5 A
Maximum Switching Voltage	250 V AC
Electrical Durability	100000 cycles, 2 A at 24 V, DC-1 100000 cycles, 5 A at 250 V, AC-1
Mechanical Durability	10000000 cycles
Rated Impulse Withstand Voltage	5 kV 1.2…50 µs IEC 60664-1
Power On Delay	350 ms
Creepage Distance	4 kV/3 IEC 60664-1
Overvoltage Category	III IEC 60664-1
Safety Reliability Data	MTTFd = 194 years B10d = 180000
Mounting Position	Any position
Mounting Support	35 mm DIN rail conforming to IEC 60715
Status Led	Green LED backlight steady)dial pointer indication Yellow LED steady)output relay energised Yellow LED steady)power ON
Width	0.89 in (22.5 mm)
Net Weight	0.22 lb(US) (0.1 kg)
Number Of Functions	1

Environment

Dielectric Strength	2.5 kV 1 mA/1 minute 50 Hz between relay output and power supply basic insulation IEC 61812-1
Standards	IEC 61812-1 UL 508
Directives	2006/95/EC - low voltage directive 2004/108/EC - electromagnetic compatibility
Product Certifications	CCC CSA GL RCM CE EAC UL
Ambient Air Temperature For Operation	-4…140 °F (-20…60 °C)
Ambient Air Temperature For Storage	-40…158 °F (-40…70 °C)
Ip Degree Of Protection	IP40 housing: conforming to IEC 60529 IP50 front face: conforming to IEC 60529 IP20 terminals: conforming to IEC 60529
Pollution Degree	3 IEC 60664-1
Vibration Resistance	20 m/s² 10…150 Hz)IEC 60068-2-6
Shock Resistance	15 gn not operating 11 ms IEC 60068-2-27 5 gn in operation 11 ms IEC 60068-2-27

Relative Humidity	95 % 77…131 °F (25…55 °C)
Electromagnetic Compatibility	Fast transients immunity test - test level: 1 kV level 3 (capacitive connecting clip) conforming to IEC 61000-4-4 Surge immunity test - test level: 1 kV level 3 (differential mode) conforming to IEC 61000-4-5 Surge immunity test - test level: 2 kV level 3 (common mode) conforming to IEC 61000-4-5 Electrostatic discharge - test level: 6 kV level 3 (contact discharge) conforming to IEC 61000-4-2 Electrostatic discharge - test level: 8 kV level 3 (air discharge) conforming to IEC 61000-4-2 Radiated radio-frequency electromagnetic field immunity test - test level: 10 V/m level 3 (80 MHz...1 GHz) conforming to IEC 61000-4-3 Conducted RF disturbances - test level: 10 V level 3 (0.15...80 MHz) conforming to IEC 61000-4-6 Fast transient bursts - test level: 2 kV level 3 (direct contact) conforming to IEC 61000-4-4 Immunity to microbreaks and voltage drops - test level: 30 % (500 ms) conforming to IEC 61000-4-11 Immunity to microbreaks and voltage drops - test level: 100 % (20 ms) conforming to IEC 61000-4-11

Ordering and shipping details

Category	US10CP222376
Discount Schedule	0CP2
Gtin	3606480792458
Returnability	Yes
Country Of Origin	US

Packing Units

Unit Type Of Package 1	PCE
Number Of Units In Package 1	1
Package 1 Height	1.02 in (2.6 cm)
Package 1 Width	3.23 in (8.2 cm)
Package 1 Length	3.74 in (9.5 cm)
Package 1 Weight	3.28 oz (93 g)

Sustainability

Green Premium™ label is Schneider Electric's commitment to delivering products with best-in-class environmental performance. Green Premium promises compliance with the latest regulations, transparency on environmental impacts, as well as circular and low-CO_2 products.

Guide to assessing product sustainability is a white paper that clarifies global eco-label standards and how to interpret environmental declarations.

Learn more about Green Premium >

Guide to assess a product's sustainability >

Transparency RoHS/REACh

Well-being performance

Mercury Free

Rohs Exemption Information Yes

Certifications & Standards

Reach Regulation	REACh Declaration
Eu Rohs Directive	Pro-active compliance (Product out of EU RoHS legal scope)
China Rohs Regulation	China RoHS declaration
Environmental Disclosure	Product Environmental Profile
Circularity Profile	End of Life Information
California Proposition 65	WARNING: This product can expose you to chemicals including: Lead and lead compounds, which is known to the State of California to cause cancer and birth defects or other reproductive harm. For more information go to www.P65Warnings.ca.gov

Dimensions Drawings

Dimensions

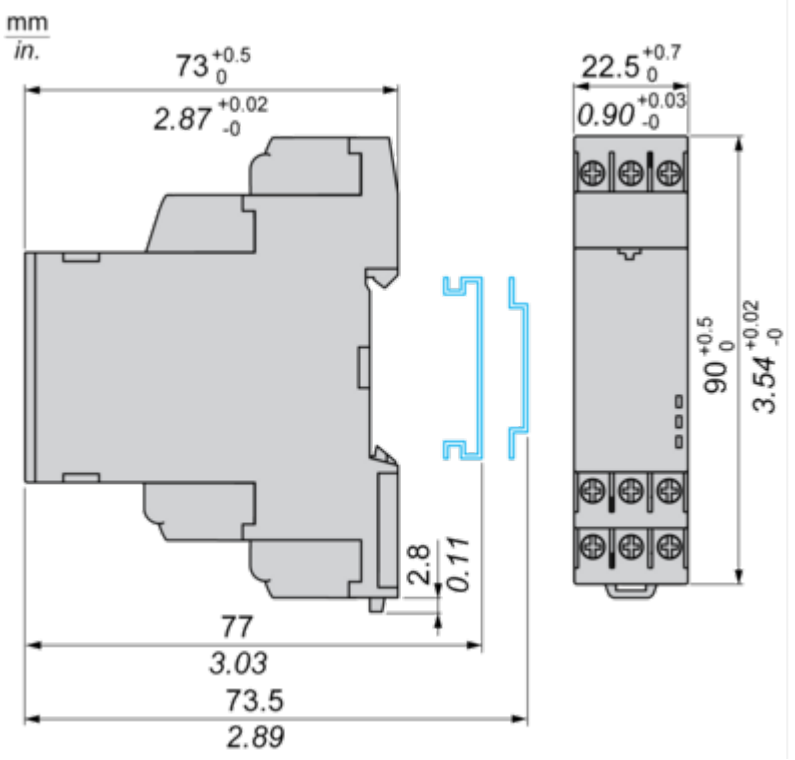

Connections and Schema

Wiring Diagram

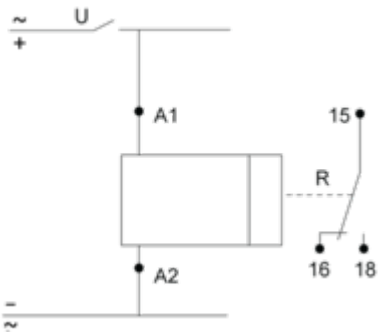

Technical Description

Function K: Delay On De-energization without Auxillary Supply

Description

On energisation of power supply, the output(s) R close(s).On de-energisation of power supply, timing period T starts and at the end of this period, the output(s) R revert(s) to its/their initial state.The energization of power supply > Tk is necessary to sustain the timing period T.

Function: 1 Output

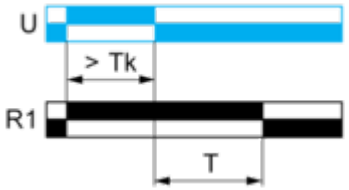

Tk > 1s

Function: 2 Outputs

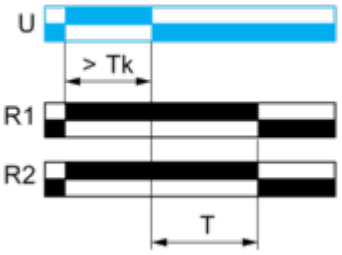

Tk > 1s

Legend

Relay de-energised

Relay energised

Output open

Output closed

U -	Supply
T -	Timing period
R1/R2 -	2 timed outputs