Product data sheet

Specifications

3-phase control relay, Harmony Control Relays, 5A, 1CO, 208...480V AC

RM17TA00

Product availability: Stock - Normally stocked in distribution facility

Price*: 177.00 USD

Main

Range Of Product	Harmony Control Relays
Relay Type	Multifunction control relay
Product Or Component Type	3-phase control relay
Product Specific Application	For 3-phase supply
Relay Name	RM17TA
Relay Monitored Parameters	Asymmetry Phase sequence Phase failure detection
Time Delay	Adjustable 0.1...10 s, +/- 10 % of the full scale value Tt- time delay upon fault
Switching Capacity In Va	1250 VA
Measurement Range	208...480 V AC
Contacts Type And Composition	1 C/O
[Uc] Control Circuit Voltage	208...480 V

Complementary

Reset Time	1500 ms time delay
Maximum Switching Voltage	250 V AC 250 V DC
Minimum Switching Current	10 mA 5 V DC
Maximum Switching Current	5 A AC 5 A DC
[Un] Rated Nominal Voltage	, self-powered
Supply Voltage Limits	183…528 V AC
Control Circuit Voltage Limits	- 12 % + 10 % Un
Power Consumption In Va	0…22 VA 400 V AC 50 Hz
Control Circuit Frequency	50...60 Hz +/- 10 %
Output Contacts	1 C/O
Nominal Output Current	5 A
Measurement Voltage Limits	183…528 V AC
Hysteresis	2 %
Delay At Power Up	650 ms
Maximum Measuring Cycle	150 ms measurement cycle as true rms value

Price is “List Price” and may be subject to a trade discount – check with your local distributor or retailer for actual price.

Disclaimer: This documentation is not intended as a substitute for and is not to be used for determining suitability or reliability of these products for specific user applications

Voltage Range	208...480 V phase to phase
Adjustment Of Asymmetry Threshold	5...15 % of Un selected
Repeat Accuracy	0.5 % input and measurement circuit 3 % time delay
Measurement Error	< 0.05 %/°C with temperature variation < 1 % over the whole range with voltage variation
Phase Failure Sensitivity	0.7 Un
Response Time	< 200 ms (in the event of a fault)
Marking	CE
Overvoltage Category	III IEC 60664-1
Insulation Resistance	> 500 MOhm 500 V DC IEC 60255-5 > 500 MOhm 500 V DC IEC 60664-1
[Ui] Rated Insulation Voltage	400 V IEC 60664-1
Supply Frequency	50/60 Hz +/- 10 %
Operating Position	Any position without derating
Connections - Terminals	Screw terminals, 1 x 0.5...1 x 4 mm² AWG 20...AWG 11) solid without cable end Screw terminals, 2 x 0.5...2 x 2.5 mm² AWG 20...AWG 14) solid without cable end Screw terminals, 1 x 0.2...1 x 2.5 mm² AWG 24...AWG 12) flexible with cable end Screw terminals, 2 x 0.2...2 x 1.5 mm² AWG 24...AWG 16) flexible with cable end
Tightening Torque	5.31…8.85 lbf.in (0.6…1 N.m) IEC 60947-1
Housing Material	Self-extinguishing plastic
Local Signalling	for power ON LED (green) for relay ON LED (yellow)
Mounting Support	35 mm symmetrical DIN rail conforming to IEC 60715
Electrical Durability	100000 cycles
Mechanical Durability	30000000 cycles
Operating Rate	<= 360 operations/hour full load
Utilisation Category	AC-12 IEC 60947-5-1 AC-13 IEC 60947-5-1 AC-14 IEC 60947-5-1 AC-15 IEC 60947-5-1 DC-12 IEC 60947-5-1 DC-13 IEC 60947-5-1
Safety Reliability Data	MTTFd = 502.2 years B10d = 470000
Width	0.69 in (17.5 mm)
Net Weight	0.29 lb(US) (0.13 kg)
Control Type	Without test button

Environment

Electromagnetic Compatibility	Emission standard for industrial environments conforming to IEC 61000-6-4 Emission standard for residential, commercial and light-industrial environments conforming to IEC 61000-6-3 Immunity for industrial environments conforming to IEC 61000-6-2
Standards	IEC 60255-1
Product Certifications	GOST CSA GL C-tick UL

Directives	89/336/EEC - electromagnetic compatibility 73/23/EEC - low voltage directive
Ambient Air Temperature For Storage	-40…158 °F (-40…70 °C)
Ambient Air Temperature For Operation	-4…122 °F (-20…50 °C)
Relative Humidity	95 % 131 °F (55 °C) IEC 60068-2-30
Vibration Resistance	0.35 mm 5…57.6 Hz)IEC 60068-2-6 1 gn 57.6…150 Hz)IEC 60255-21-1
Shock Resistance	15 gn 11 ms IEC 60255-21-1
Ip Degree Of Protection	IP20 IEC 60529 terminals) IP30 IEC 60529 casing)
Pollution Degree	3 IEC 60664-1
Dielectric Test Voltage	2 kV AC 50 Hz, 1 min IEC 60255-5 2 kV AC 50 Hz, 1 min IEC 60664-1
Non-Dissipating Shock Wave	4 kV IEC 60255-5 4 kV IEC 60664-1 4 kV IEC 61000-4-5

Ordering and shipping details

Category	US10CP222380
Discount Schedule	0CP2
Gtin	3389119405041
Returnability	Yes
Country Of Origin	ID

Packing Units

Unit Type Of Package 1	PCE
Number Of Units In Package 1	1
Package 1 Height	1.10 in (2.800 cm)
Package 1 Width	3.07 in (7.800 cm)
Package 1 Length	3.78 in (9.600 cm)
Package 1 Weight	3.25 oz (92.000 g)
Unit Type Of Package 2	S02
Number Of Units In Package 2	48
Package 2 Height	5.91 in (15.000 cm)
Package 2 Width	11.81 in (30.000 cm)
Package 2 Length	15.75 in (40.000 cm)
Package 2 Weight	10.88 lb(US) (4.935 kg)

Contractual warranty

Warranty	18 months

Sustainability

Green Premium™ label is Schneider Electric's commitment to delivering products with best-in-class environmental performance. Green Premium promises compliance with the latest regulations, transparency on environmental impacts, as well as circular and low-CO_2 products.

Guide to assessing product sustainability is a white paper that clarifies global eco-label standards and how to interpret environmental declarations.

Learn more about Green Premium >

Guide to assess a product's sustainability >

Transparency RoHS/REACh

Well-being performance

Mercury Free

Rohs Exemption Information Yes

Certifications & Standards

Reach Regulation	REACh Declaration
Eu Rohs Directive	Pro-active compliance (Product out of EU RoHS legal scope)
China Rohs Regulation	China RoHS declaration
Environmental Disclosure	Product Environmental Profile
Circularity Profile	End of Life Information
California Proposition 65	WARNING: This product can expose you to chemicals including: Lead and lead compounds, which is known to the State of California to cause cancer and birth defects or other reproductive harm. For more information go to www.P65Warnings.ca.gov

Dimensions Drawings

Multifunction 3-Phase Supply Control Relays

Dimensions and Mounting

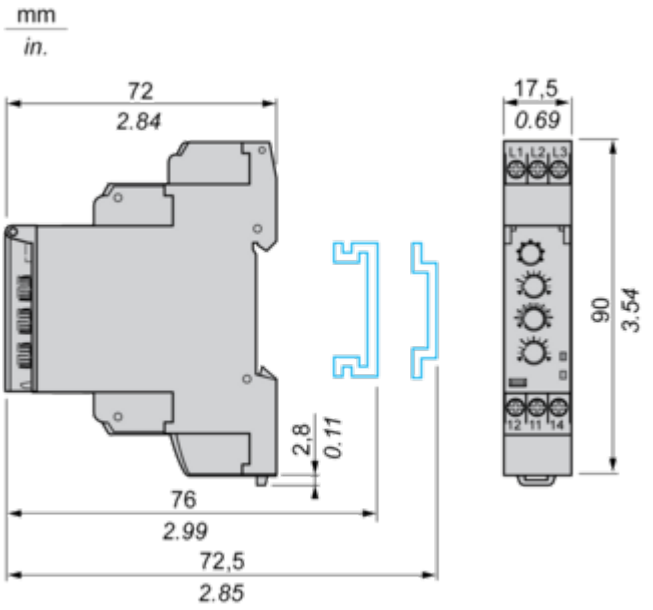

Connections and Schema

Multifunction 3-Phase Supply Control Relays

Wiring Diagram

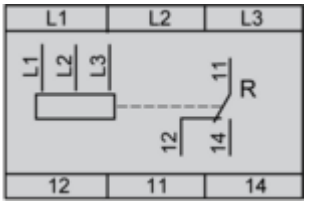

Technical Description

Function Diagram

Phase Sequence Control, Phase Failure Detection (U measured < 0.7 x nominal supply voltage), and Asymmetry Detection

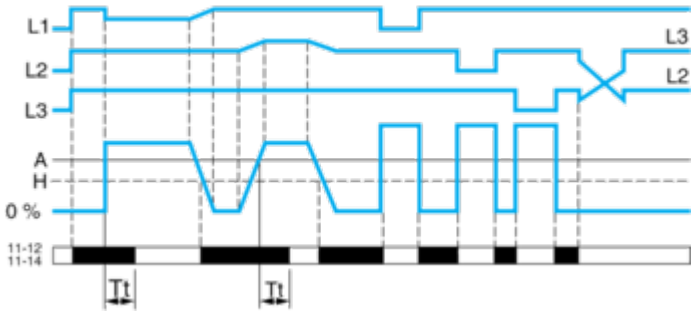

Legend

Tt Time delay after crossing of threshold
L1, L2, L3 Phases of the supply voltage monitored
A Asymmetry threshold
H Hysteresis
11-12, 11-14 Output relay connections
Relay status: black color = energized.