Product data sheet

Specifications

current control relay, Harmony Control Relays, 5A, 2CO, 0.15â€¦15A, 24â€¦240V AC DC

RM35JA32MR

Product availability: Stock - Normally stocked in distribution facility

Price*: 132.89 USD

Main

Range Of Product	Harmony Control Relays
Relay Type	Current control relay
Product Or Component Type	Current control relay
Relay Name	RM35JA
Relay Monitored Parameters	Overcurrent or undercurrent in window mode Overcurrent or undercurrent detection
Time Delay	Adjustable 0.1...30 s, +/- 10 % of the full scale value Tt- time delay upon fault
Switching Capacity In Va	2000 VA
Minimum Switching Current	10 mA 5 V DC
Maximum Switching Current	8 A AC
Maximum Power Consumption In Va	3.5 VA
Measurement Range	150 mA...15 A AC/DC
Utilisation Category	AC-15 IEC 60947-5-1 DC-13 IEC 60947-5-1 AC-1 IEC 60947-4-1 DC-1 IEC 60947-4-1
Contacts Type And Composition	2 C/O

Complementary

Reset Time	1500 ms at maximum voltage
Maximum Switching Voltage	250 V AC
Supply Voltage Limits	20.4…264 V AC/DC
Operating Voltage Tolerance	- 15 % + 10 % Un
Maximum Power Consumption In W	1.5 W DC
Resistance Across Terminals	0.005 Ohm E3-M terminals 0.015 Ohm E2-M terminals 0.05 Ohm E1-M terminals
Output Contacts	2 C/O
Nominal Output Current	8 A
Maximum Measuring Cycle	100 ms measurement cycle as true rms value
Internal Input Resistance	0.015 Ohm 0.005 Ohm 0.05 Ohm

Price is “List Price” and may be subject to a trade discount – check with your local distributor or retailer for actual price.

Disclaimer: This documentation is not intended as a substitute for and is not to be used for determining suitability or reliability of these products for specific user applications

Setting Accuracy Of The Switching Threshold	+/- 10 % of the full scale
Switching Threshold Drift	<= 0.05 % per degree centigrade depending permissible ambient air temperature <= 1 % within the supply voltage range
Setting Accuracy Of Time Delay	10 P
Time Delay Drift	<= 0.05 % per degree centigrade depending permissible ambient air temperature <= 1 % within the supply voltage range
Hysteresis	5…50 % adjustable threshold setting 3 % fixed full scale for window mode
Delay At Power Up	0.3 s
Repeat Accuracy	+/- 0.5 % input and measurement circuit +/- 2 % time delay
Measurement Error	< 1 % over the whole range with voltage variation 0.05 %/°C with temperature variation
Response Time	<= 500 ms (on crossing the threshold)
Threshold Setting	10...100 %
Overvoltage Category	III IEC 60664-1 III UL 508
Insulation Resistance	> 100 MOhm 500 V DC IEC 60255-27
Insulation	Between supply and measurement
Connections - Terminals	Screw terminals, 2 x 0.5...2 x 2.5 mm² AWG 20...AWG 14) solid without cable end Screw terminals, 2 x 0.2...2 x 1.5 mm² AWG 24...AWG 16) flexible with cable end Screw terminals, 1 x 0.5...1 x 3.3 mm² AWG 20...AWG 12) solid without cable end Screw terminals, 1 x 0.2...1 x 2.5 mm² AWG 24...AWG 14) flexible with cable end
Tightening Torque	5.31…8.85 lbf.in (0.6…1 N.m) IEC 60947-1
Housing Material	Self-extinguishing plastic
Local Signalling	for relay ON LED (yellow) for power ON LED (green)
Mounting Support	35 mm DIN rail conforming to IEC 60715
Electrical Durability	100000 cycles
Mechanical Durability	10000000 cycles
[Un] Rated Nominal Voltage	24...240 V AC/DC 50/60 Hz, non self-powered
Safety Reliability Data	MTTFd = 296.8 years B10d = 270000
Contacts Material	Cadmium free
Width	1.38 in (35 mm)
Control Type	With test button
Net Weight	0.26 lb(US) (0.12 kg)

Environment

Immunity To Microbreaks	50 ms

Electromagnetic Compatibility	Immunity for residential, commercial and light-industrial environments conforming to IEC 61000-6-1 Immunity for industrial environments conforming to IEC 61000-6-2 Emission standard for industrial environments conforming to IEC 61000-6-4 Electrostatic discharge - test level: 6 kV level 3 (contact discharge) conforming to IEC 61000-4-2 Electrostatic discharge - test level: 8 kV level 3 (air discharge) conforming to IEC 61000-4-2 Radiated radio-frequency electromagnetic field immunity test - test level: 10 V/m level 3 conforming to IEC 61000-4-3 Electrical fast transient/burst immunity test - test level: 4 kV level 4 (direct) conforming to IEC 61000-4-4 Electrical fast transient/burst immunity test - test level: 2 kV level 4 (capacitive coupling) conforming to IEC 61000-4-4 Surge immunity test - test level: 4 kV level 4 (common mode) conforming to IEC 61000-4-5 Surge immunity test - test level: 2 kV level 4 (differential mode) conforming to IEC 61000-4-5 Conducted and radiated emissions class B group 1 conforming to CISPR 11 Conducted and radiated emissions class B conforming to CISPR 22 Emission standard for residential, commercial and light-industrial environments (except radiated emission) conforming to IEC 61000-6-3
Standards	IEC 60255-1
Product Certifications	CE GL CCC EAC RCM UL CSA
Ambient Air Temperature For Storage	-40…158 °F (-40…70 °C)
Ambient Air Temperature For Operation	-4…122 °F (-20…50 °C) 60 Hz -4…140 °F (-20…60 °C) 50 Hz
Environmental Characteristic	3K3 C
Relative Humidity	93…97 % 77…131 °F (25…55 °C) IEC 60068-2-30
Vibration Resistance	0.075 mm 10…58.1 Hz) not in operation IEC 60068-2-6 1 gn 10…58.1 Hz) not in operation IEC 60068-2-6 0.035 mm 58.1…150 Hz) in operation IEC 60068-2-6 0.5 gn 58.1…150 Hz) in operation IEC 60068-2-6
Shock Resistance	15 gn 11 ms) not in operation IEC 60068-2-27 5 gn 11 ms) in operation IEC 60068-2-27
Ip Degree Of Protection	IP20 IEC 60529 terminals) IP50 IEC 60529 front panel) IP30 IEC 60529 housing)
Pollution Degree	3 IEC 60664-1 3 UL 508
Dielectric Test Voltage	2.5 kV AC 50 Hz, 1 min IEC 60255-27

Ordering and shipping details

Category	US10CP222380
Discount Schedule	0CP2
Gtin	3606480792304
Returnability	Yes
Country Of Origin	US

Packing Units

Unit Type Of Package 1	PCE
Number Of Units In Package 1	1

Package 1 Height	3.07 in (7.8 cm)
Package 1 Width	1.77 in (4.5 cm)
Package 1 Length	3.74 in (9.5 cm)
Package 1 Weight	4.62 oz (131 g)
Unit Type Of Package 2	S02
Number Of Units In Package 2	32
Package 2 Height	5.91 in (15 cm)
Package 2 Width	11.81 in (30 cm)
Package 2 Length	15.75 in (40 cm)
Package 2 Weight	10.24 lb(US) (4.647 kg)

Sustainability

Green Premium™ label is Schneider Electric's commitment to delivering products with best-in-class environmental performance. Green Premium promises compliance with the latest regulations, transparency on environmental impacts, as well as circular and low-CO_2 products.

Guide to assessing product sustainability is a white paper that clarifies global eco-label standards and how to interpret environmental declarations.

Learn more about Green Premium >

Guide to assess a product's sustainability >

Transparency RoHS/REACh

Well-being performance

Mercury Free

Rohs Exemption Information	Yes

Certifications & Standards

Reach Regulation	REACh Declaration
Eu Rohs Directive	Pro-active compliance (Product out of EU RoHS legal scope)
China Rohs Regulation	China RoHS declaration
Environmental Disclosure	Product Environmental Profile
Weee	The product must be disposed on European Union markets following specific waste collection and never end up in rubbish bins.
Circularity Profile	End of Life Information
California Proposition 65	WARNING: This product can expose you to chemicals including: Lead and lead compounds, which is known to the State of California to cause cancer and birth defects or other reproductive harm. For more information go to www.P65Warnings.ca.gov

Dimensions Drawings

Dimensions

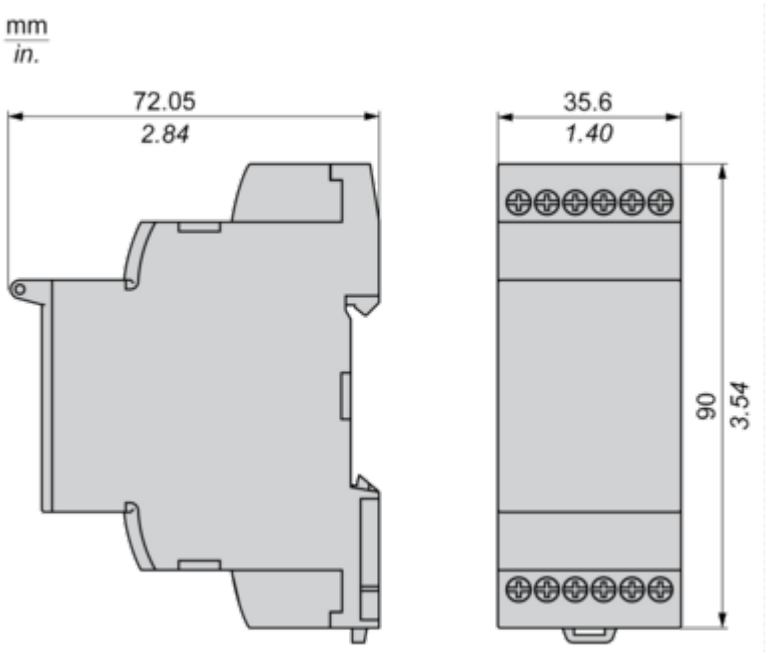

Mounting and Clearance

Mounting and Clearance

Rail Mounting

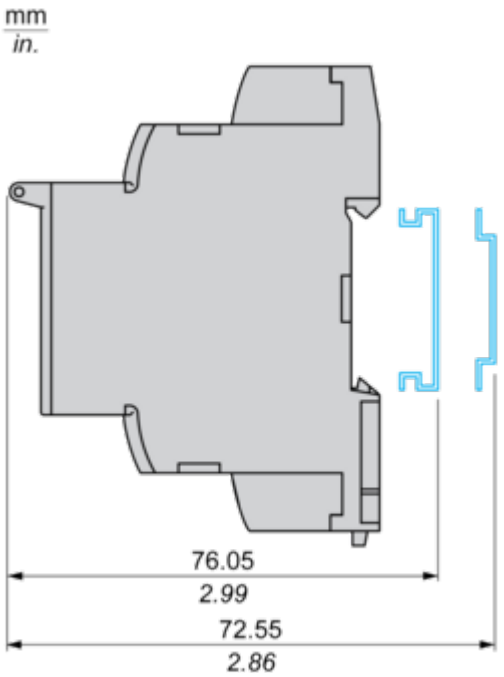

Connections and Schema

Current Measurement Relay

Wiring Diagram

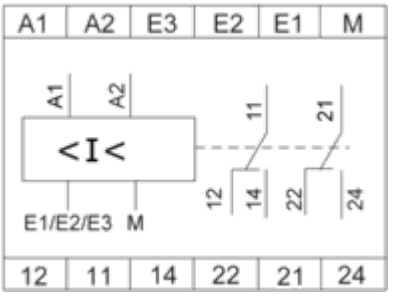

A1,A2 : Supply voltage
E1,E2,E3,M : Currents to be measured
11-14,12 : 1st C/O contact of output relay
21-24,22 : 2nd C/O contact of output relay

Technical Description

Function Diagrams

Undercurrent Detection

Without memory ("No Memory" mode)

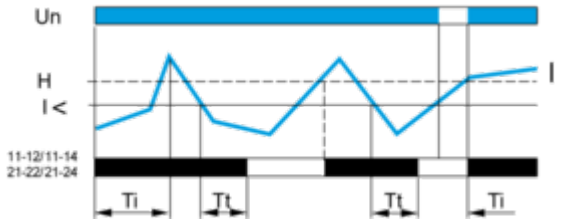

With memory ("Memory" mode)

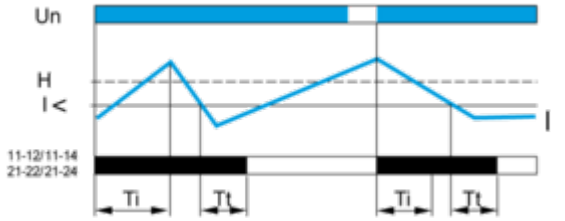

Overcurrent Detection

Without memory ("No Memory" mode)

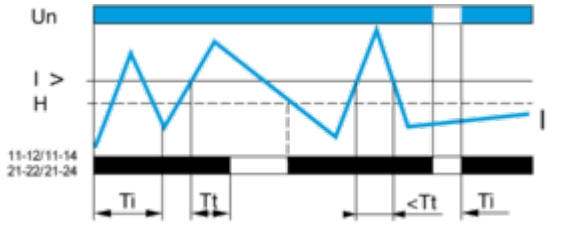

With memory ("Memory" mode)

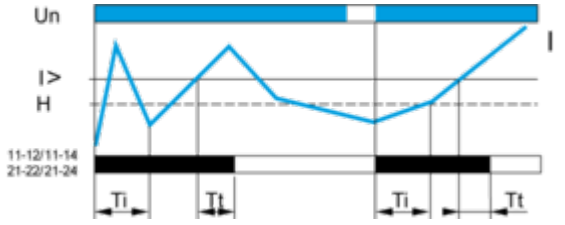

Legend

Ti Starting inhibition time delay
Tt Time delay after crossing of threshold
Un Supply voltage
I Monitored current
H Hysteresis
I> Overcurrent threshold
I< Undercurrent threshold
11-12/11-14, 21-22/21-24 Output relay connections
Relay status: black color = energized.

NOTE: In "Memory" mode, the relay opens when crossing of the threshold is detected and then stays in that position. The power supply voltage must be switched off to reset the product.